Print Clear Form

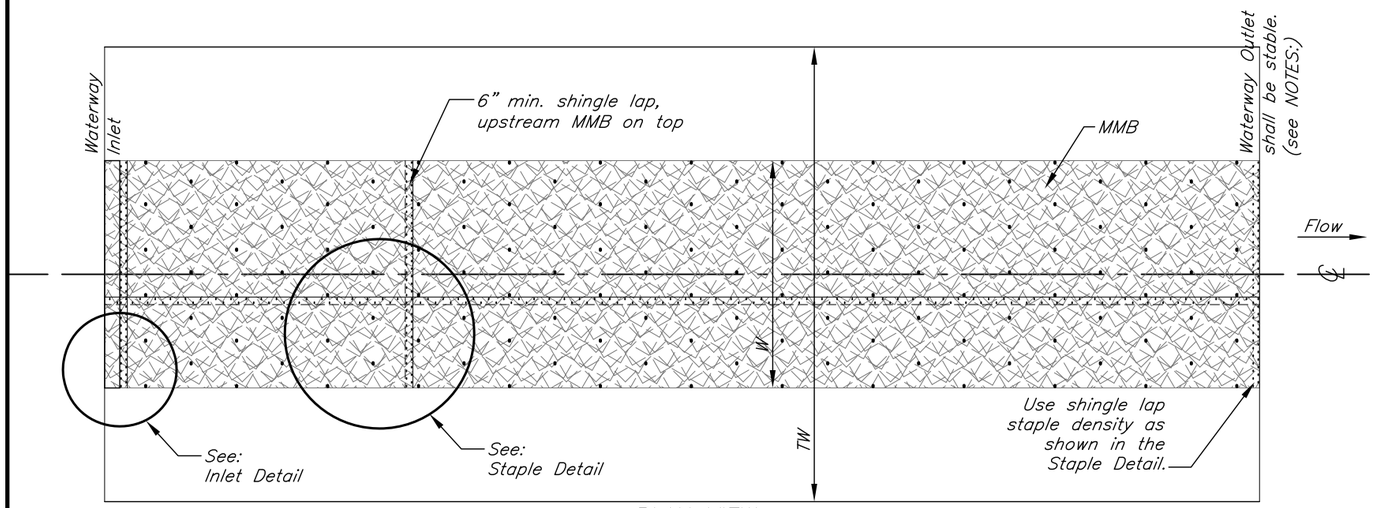

PLAN VIEW

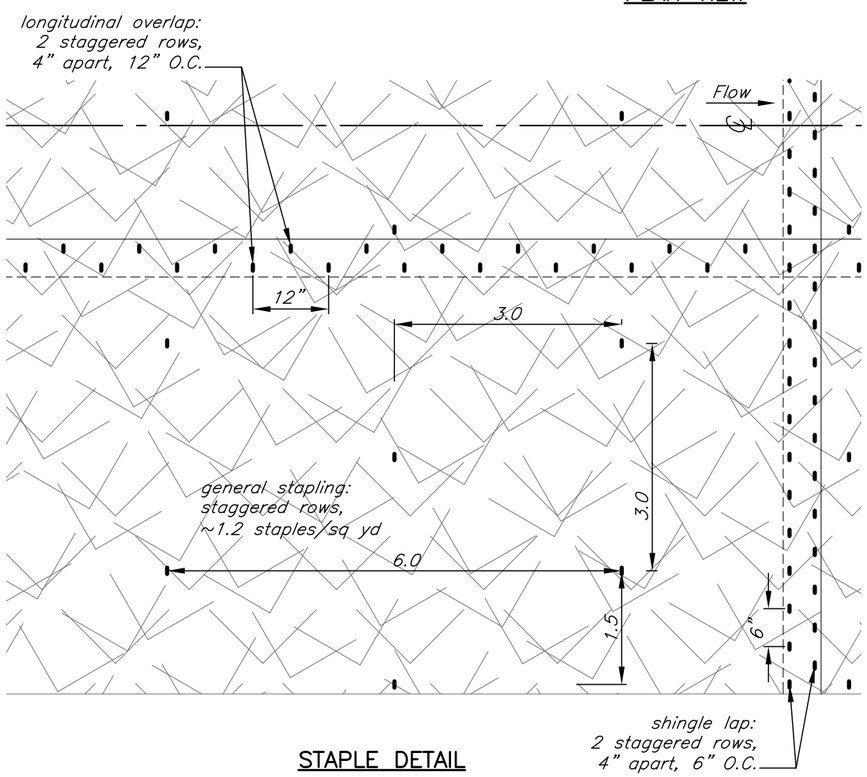

STAPLE DETAIL

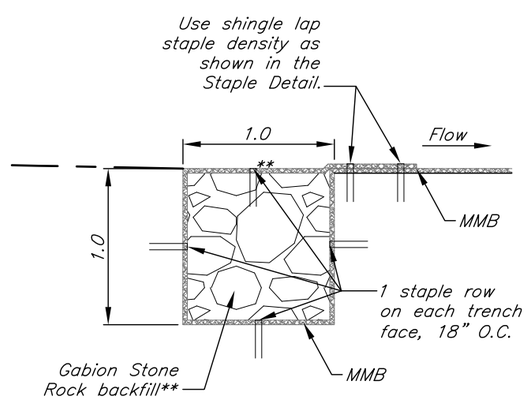

** see NOTES: for earthfill option

INLET DETAIL

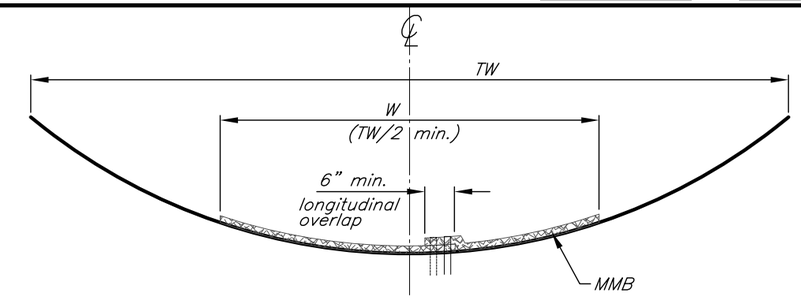

TYPICAL SECTION

NOTES:

1. Products available for manufactured mulch blanket applications are commercially referred to as:
   ECB – Erosion Control Blanket
   RECP – Rolled Erosion Control Product
2. This Standard Drawing complies with NRCS Conservation Practice Standard, 484 Mulching. It shall not be used with NRCS Conservation Practice Standard, 468 Lined Waterway or Outlet.
3. The manufactured mulch blanket shall be double netted (top and bottom) with a mulch medium between the nets comprised of straw, coconut fiber, straw/coconut fiber, wood excelsior, or equivalent material.
4. Minimum dry weight per surface area requirements (ASTM D6475) shall be 0.5 lb/sq yd or meet criteria of FHWA FP-03, Rolled Erosion Control Product Type 2.D, short-term double-net erosion control blankets.
5. All constructed finished grades, seedbed preparation, fertilizing, and seeding shall be approved by NRCS before installation of the MMB.
6. MMB shall be laid parallel to the direction of flow. Spread evenly without stretching to allow maximum contact with the soil.
7. U-Staples are to have a 1" crown and be 11 gauge or heavier wire. Manufacturers may have an alternative fastener type compatible with their ECB/RECP material and suitable to hold in the anticipated soil condition.
8. U-Staples shall be inset 1" min. from all blanket edges.
9. Rock backfill shall meet the quality and gradation found in Iowa DOT Standard Specification Section 4130, GABION STONE. **Earthfill option for Inlet Detail -- 4" lifts compacted to a density equivalent to that of the surrounding native soil. Care should be taken to not tear the MMB. Add 1 additional staple row to the top face of the trench backfill, 18" O.C.
10. Lateral waterways w/ MMB shall be shingle lapped over the Main waterway MMB. Lateral waterways w/o MMB shall use a shingle lap staple density on the Main waterway MMB edge for a distance equal to the width of the Lateral waterway entering the Main waterway.
11. The Waterway Outlet staple pattern is only allowed for stable outlet conditions (i.e. Lateral into a Main). A waterway requiring a grade stabilization structure shall have the MMB outlet termination anchoring incorporated into the inlet portion of the grade stabilization structure.
12. Estimated total staple quantities based upon gross area, using an 8'x112.5' MMB roll:
    W=15': 2.8 staples/sq yd @ typical waterway length of 700 ft
    W=22.5': 3.2 staples/sq yd @ typical waterway length of 700 ft
    W=30': 3.3 staples/sq yd @ typical waterway length of 1500 ft
13. Inlet trench rock quantity calculated by the following equation.
    [W x 1' x 1'] / [27 cu ft/cu yd] x 1.6 tons/cu yd = ____ tons per inlet trench

Manufactured Mulch Blanket Data

Waterway Number	Start Station	End Station	Staple Length: L (in)	MMB Width: W (ft)	MMB Length (lin ft)	MMB Plan Area (sq yd)	Staple Quantity (No.)	Rock Quantity (Ton)
					TOTALS:			

NOT TO SCALE

STANDARD DWG. IA-1520

DATE: Feb 2011 | SHEET 1 OF 1

Required Staple Length

Soil Condition	L (in)
Highly compacted soils	6
Friable soils	8
Loose or Sandy soils	10

Date
Designed
Drawn
Checked
Approved

Manufactured Mulch Blanket (MMB) for Parabolic Grassed Waterways

County, Iowa

NRCS Natural Resources Conservation Service United States Department of Agriculture

File No.

Drawing No.

Sheet of