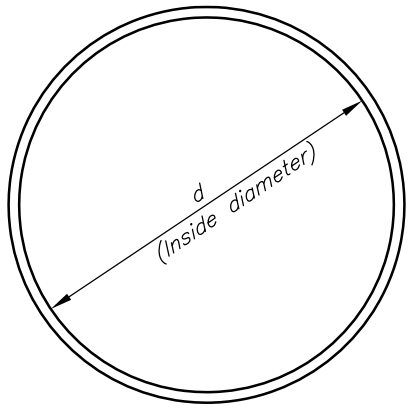

BENDING DIAGRAM FOR
ⓑ AND ⓒ RODS

TABLE OF DIMENSIONS AND QUANTITIES
WELDED STEEL PIPE

NPS	PIPE O.D.	APPROX. WEIGHT	ⓐ ROD SIZE	H	R	X	O	LENGTH	NUMBER REQUIRED	N	ⓑ ROD SIZE	d	LENGTH	NUMBER REQUIRED	ⓒ ROD SIZE	d	LENGTH	NUMBER REQUIRED	ⓓ ROD SIZE	d	LENGTH	NUMBER REQUIRED
IN.	IN.	LBS.	IN.	IN.	IN.	IN.	IN.	IN.		IN.	IN.	IN.	IN.		IN.	IN.	IN.		IN.	IN.	IN.	
6	6 5/8	18.9	3/8	9	4	6	9 1/2	33 1/2	14	4 1/8	3/8	17 1/8	53 3/4	3	--	--	--	0	2 X 1/4	7 3/8	14 5/8	2
8	8 5/8	22.3	3/8	11	4 1/2	6	10 1/2	36 1/2	10	6 1/2	3/8	19 1/8	60 1/8	3	--	--	--	0	2 X 1/4	9 3/8	17 3/4	2
10	10 3/4	24.7	3/8	13	4 1/2	6	11 1/2	39 1/2	10	7 1/8	3/8	21 1/4	66 3/4	3	--	--	--	0	2 X 1/4	11 1/2	21 1/8	2
12	12 3/4	27.1	3/8	15	4 1/2	6	12 1/2	42 1/2	10	7 3/4	3/8	23 1/4	73	3	--	--	--	0	2 X 1/4	13 1/2	24 1/4	2
14	14	48.4	1/2	17	6 1/2	6	14	46	10	8 1/8	1/2	24	75 3/8	3	1/2	10	31 3/8	1	2 X 1/4	15	26 5/8	2
16	16	52.4	1/2	19	7	6	15	49	10	8 3/4	1/2	26	81 5/8	3	1/2	12	37 5/8	1	2 X 1/4	17	29 3/4	2
18	18	69.5	1/2	22	9	9	19 1/2	59 1/2	12	9 3/8	1/2	34	106 7/8	3	1/2	14	44	1	2 X 1/4	19	32 7/8	2
20	20	112.4	5/8	25	9 1/2	9	20 1/2	63 1/2	12	10	5/8	35 1/2	111 1/2	3	5/8	16	50 1/4	1	2 X 1/4	21 1/4	36 3/8	2
24	24	124.6	5/8	30	11	9	23	71	12	11	5/8	39 1/2	124 1/8	3	5/8	18 3/4	58 7/8	1	2 X 1/4	25 1/4	42 5/8	2

Note: NPS – Nominal Pipe Size.
Weld ⓑ and ⓒ rods and ⓓ bars to ⓐ rods and weld ⓐ rods to 3" diam. Steel Plate.
Rod and bar dimensions calculated from inside diameter and rounded to the nearest 1/8 inch.

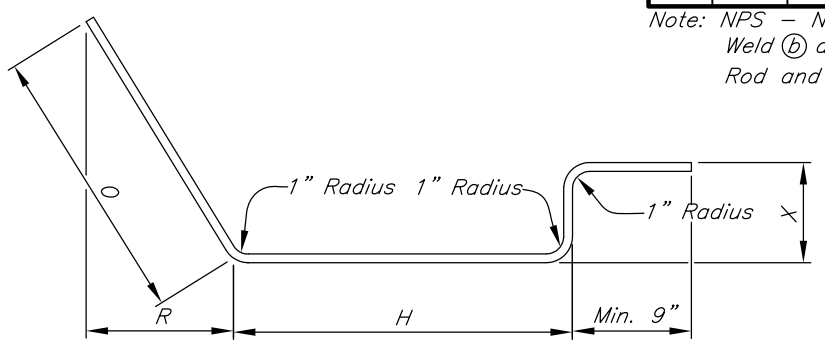

BENDING DIAGRAM FOR
ⓐ RODS

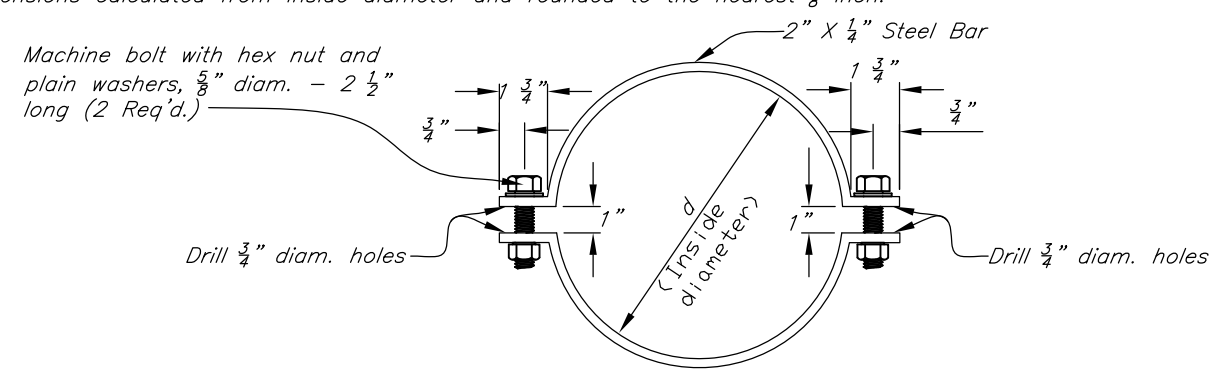

BENDING DIAGRAM FOR
ⓓ BARS

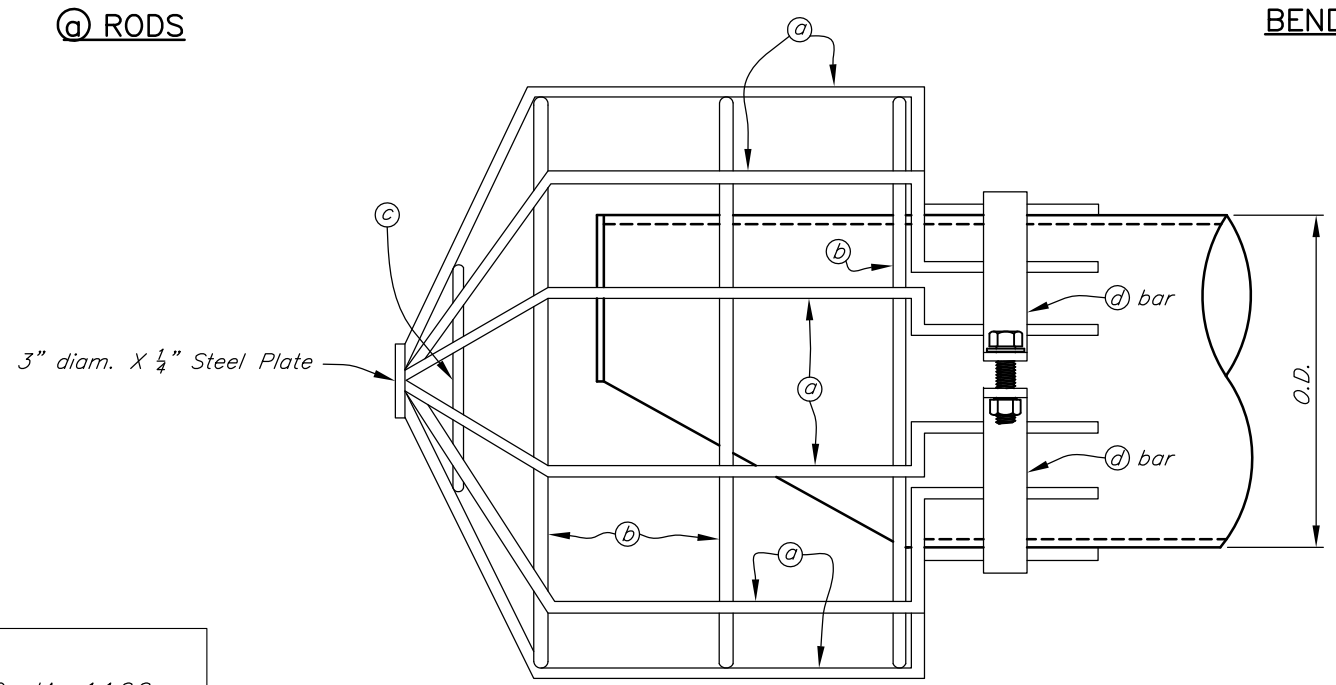

ELEVATION

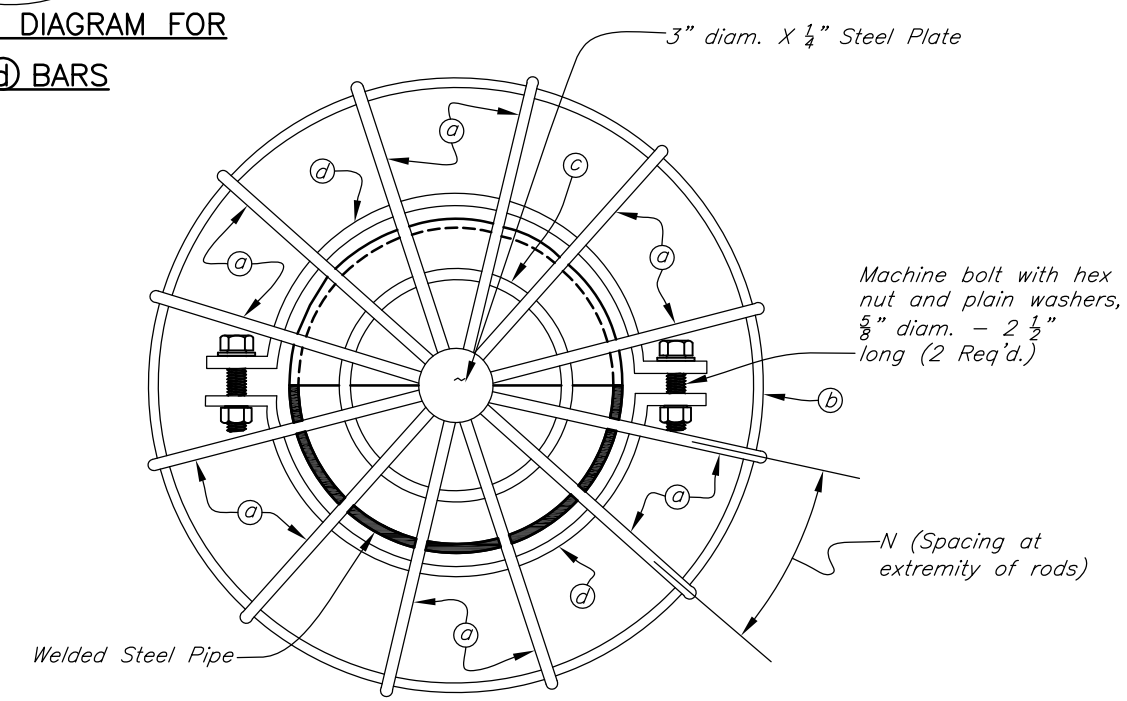

END ELEVATION

STANDARD DWG. IA–1166

DATE Oct. 2012 | PAGE 1 OF 1

Date
Designed
Drawn
Checked
Approved

TRASH RACK FOR
WELDED STEEL PIPE
CANOPY INLET

NRCS
Natural Resources Conservation Service
United States Department of Agriculture

File No.
Drawing No.
Sheet of