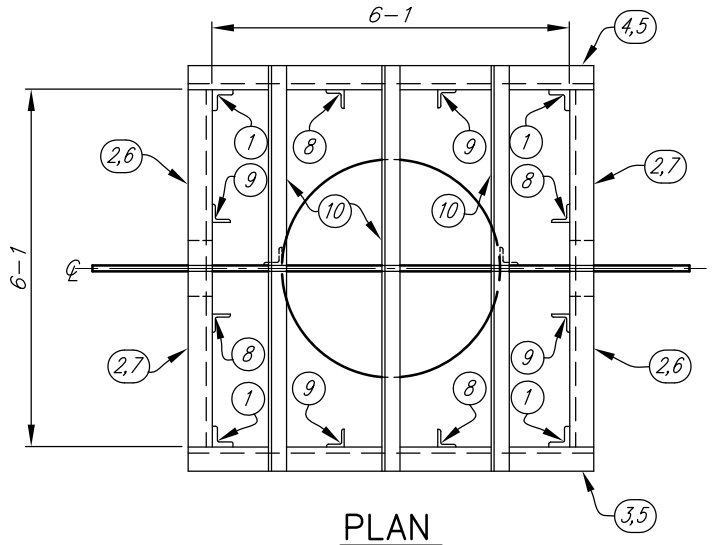

PLAN

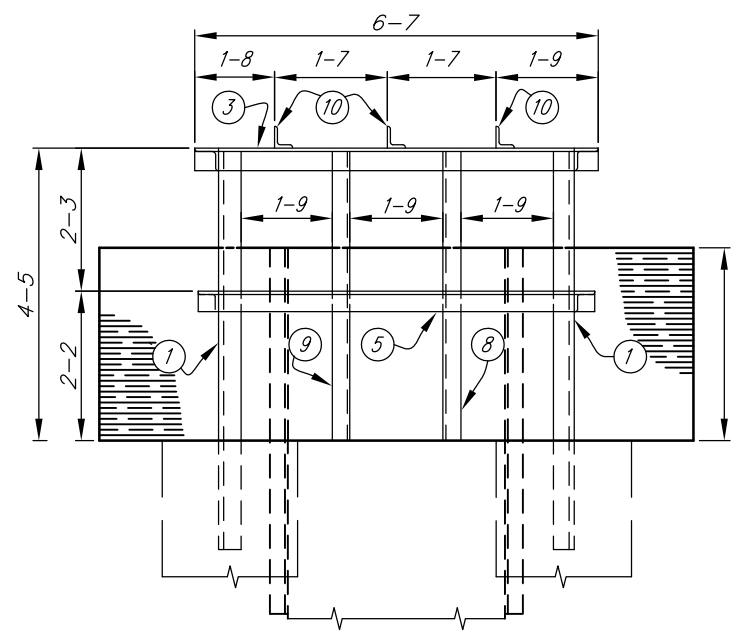

Note:
Maximum Anti-vortex device height = 4–0

RIGHT SIDE ELEVATION

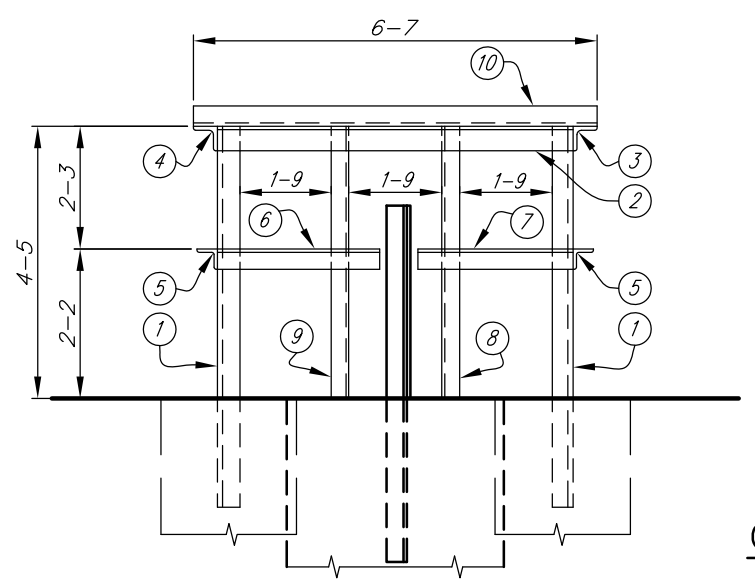

UPSTREAM ELEVATION

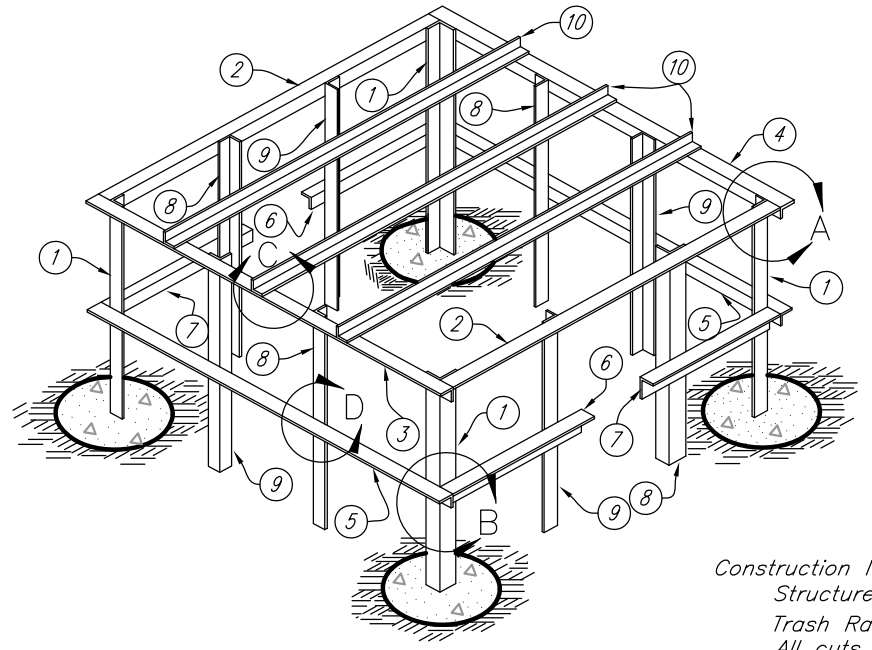

ISOMETRIC VIEW

Not to Scale

BILL OF MATERIALS			LENGTHS
Mark	Quantity	Item	60" Diam.
1	4	∠'s 3"x3"x5/16"	5–5
2	2	"	6–1
3	1	"	6–7
4	1	"	6–7
5	2	∠'s 2"x2"x3/16"	6–5
6	2	"	2–9
7	2	"	2–9
8	4	"	4–5
9	4	"	4–5
10	3	"	6–7
	46	1/2" ø Machine Bolts w/Lock Washers and Hex. Nuts	0–1 1/2
		Concrete_ _ _ _ _ _ _0.6 Cu.Yd.	

Construction Notes:

Structure is symmetrical about ℄.

Trash Rack to be fabricated of steel angles, bolted together with 1/2" diam. machine bolts. All cuts shall be saw cuts.

All holes for bolts shall be 1/16 inch larger than bolt diam.

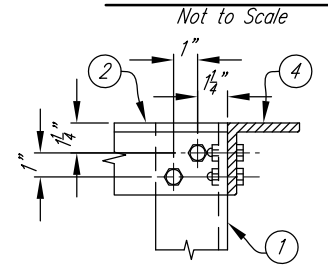

FRONT ELEV.

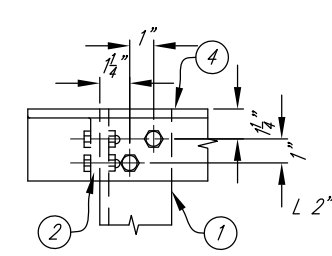

SIDE ELEV.

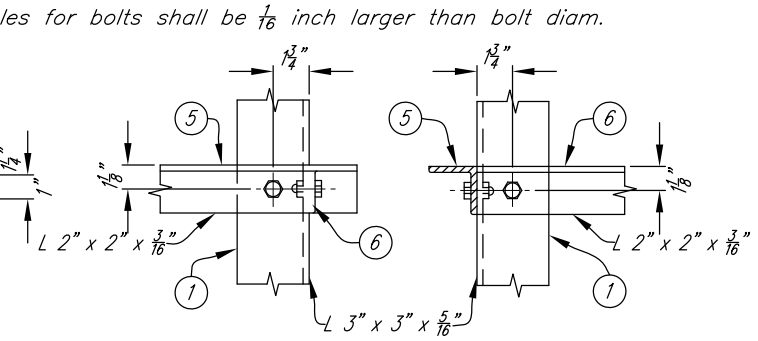

SIDE ELEV. FRONT ELEV.

VIEW "B"

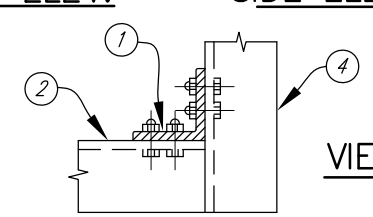

VIEW "A"

PLAN

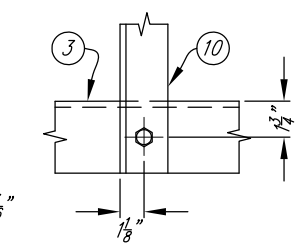

PLAN

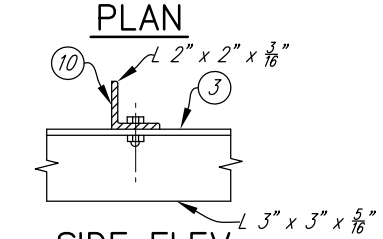

SIDE ELEV.

VIEW "C"

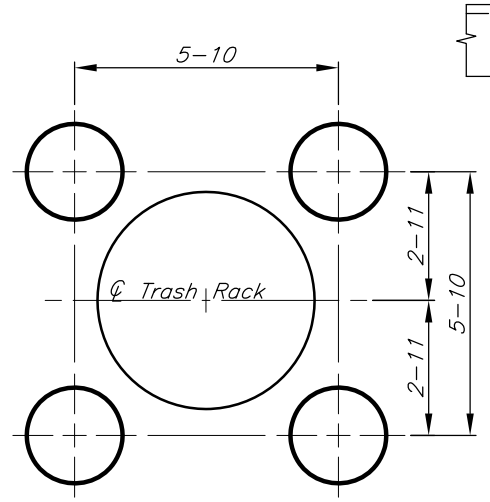

CONCRETE FOOTING LAYOUT

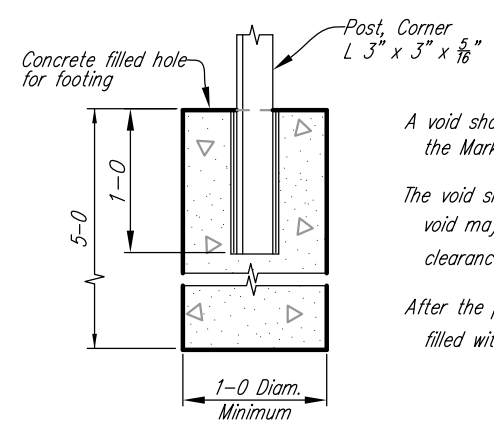

FOOTING DETAIL

A void shall be formed in the concrete footings to receive the Mark (1) posts.

The void shall be one foot deep. The cross section of the void may be triangular, rectangular or circular with 1/4" clearance between the concrete and the Mark (1) posts.

After the posts are installed, the remaining voids shall be filled with bituminous mastic.

Not to Scale

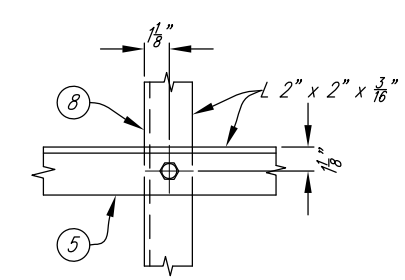

SIDE ELEV.

VIEW "D"

STANDARD DWG. IA–1111

DATE Oct. 2012 | PAGE 1 OF 1

Date

Designed

Drawn

Checked

Approved

DETAILS OF TRASH RACK FOR 60" C.M. PIPE VERTICAL INLET

NRCS
Natural Resources Conservation Service
United States Department of Agriculture

File No.

Drawing No.

Sheet of