BRIDGING STRAP CABLE LENGTHS

C. M. Pipe Coupling Bands	CABLES			
	A		B*	
	LENGTH	QUANTITY	LENGTH	QUANTITY
24" Long	2'-6"	2	D + 6"**	1

* Use "B" cable only when a two piece band is used.
** D = Pipe Diameter.
Example = 30" Diam. Pipe
"B" Cable Length 30" + 6" = 36"

Notes:
1. The cables shall be No. 6 AWG Copper Cable.
2. Cables shall have 3" or more slack after welding to allow for pipe movement.
3. For corrugated metal pipe installations weld cables on crest of corrugation.
4. Terminal welds on bands shall be placed outside of band lap area to avoid interface with lap.

TABLE OF QUANTITIES

ITEM	UNIT	NO.
GUARD STAKE (6-6 FOOT STEEL POST)	EACH	1
TEST BOX ASSEMBLY: MIN. NO. OF TERMINALS ☐ MIN. NO. OF SHORTING BARS ☐	EACH	1
NO. 6 AWG COPPER BRIDGING CABLE	LIN. FT.	
NO. 12 AWG COPPER CABLE, RED INSULATION	LIN. FT.	
NO. 12 AWG COPPER CABLE, BLACK INSULATION	LIN. FT.	
PACKAGED ANODE TYPE: ☐ ZINC ☐ STD. POTENTIAL MAGNESIUM ☐ HIGH POTENTIAL MAGNESIUM ANODE WEIGHT: _____ POUNDS APPROXIMATE PACKAGE DIMENSIONS: ___ IN. DIAM. X ____ IN. LENGTH	EACH	

Notes:
1. The header cable(s) from the anode(s) shall have red insulation. The cable from the pipe shall have black insulation.
2. Each cable shall be attached to a separate terminal inside the test box and connected to other cables with shorting bars.
3. See General Layout for required number of header cables.
4. Powder weld shall be equal to or better than Cadweld or Thermoweld.
5. Anode(s) shall be installed in moist undisturbed soil above the permanent water table. Exact location shall be as directed by the Engineer.

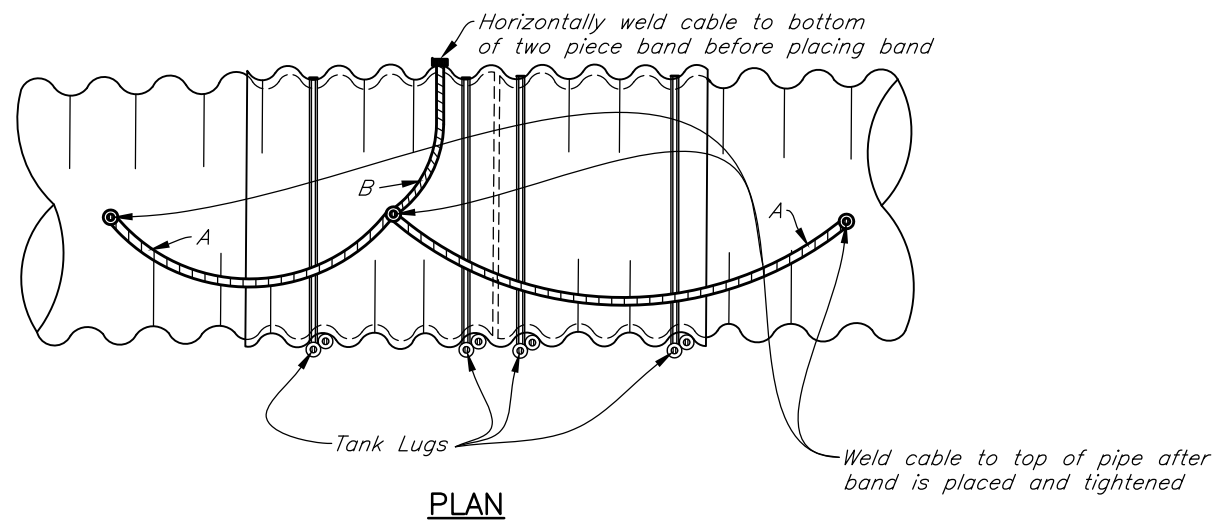

PLAN
CORRUGATED METAL PIPE COUPLING BAND
BRIDGING STRAP
Not To Scale

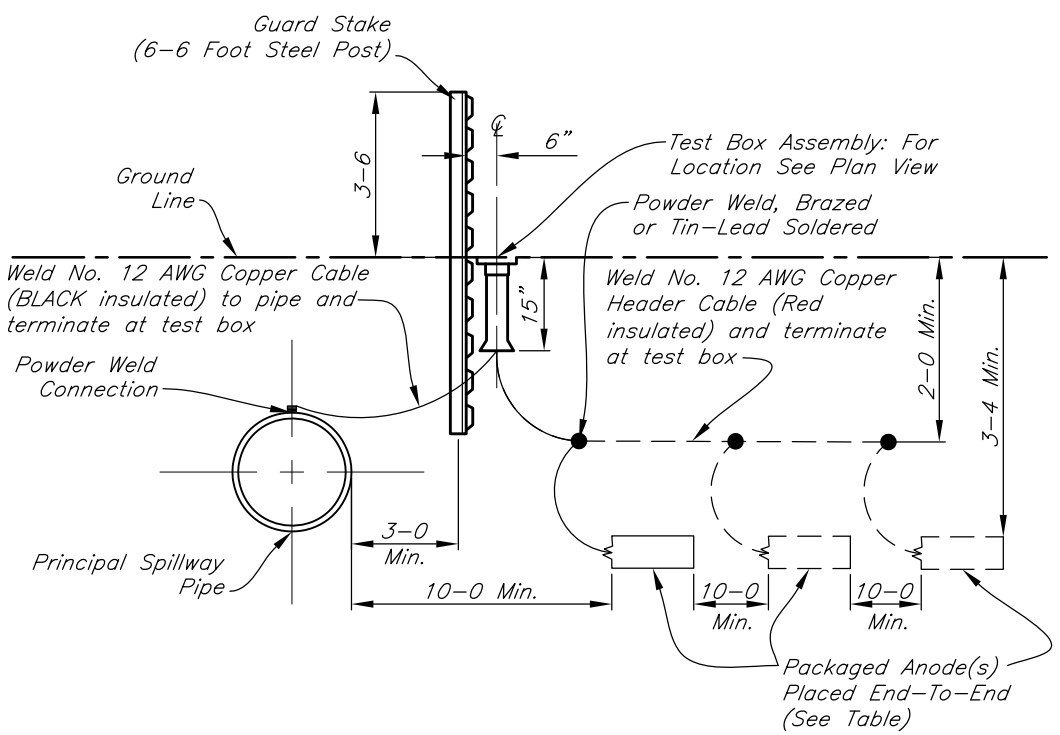

DETAILS OF ANODE INSTALLATION
Not To Scale

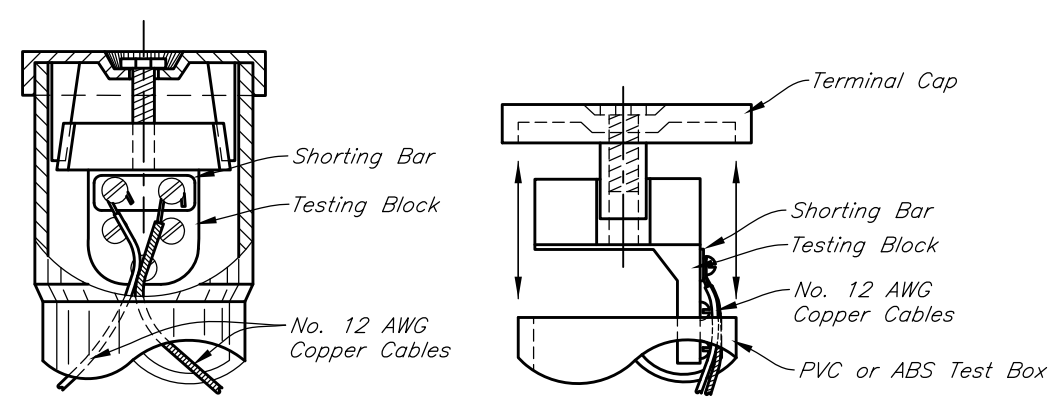

DETAILS OF TEST BOX ASSEMBLY
Not To Scale

STANDARD DWG. IA-1123

DATE Oct. 2012 | PAGE 1 OF 1

Date
Designed
Drawn
Checked
Approved

STANDARD DETAILS
CATHODIC PROTECTION

NRCS
Natural Resources Conservation Service
United States Department of Agriculture

File No.
Drawing No.
Sheet of