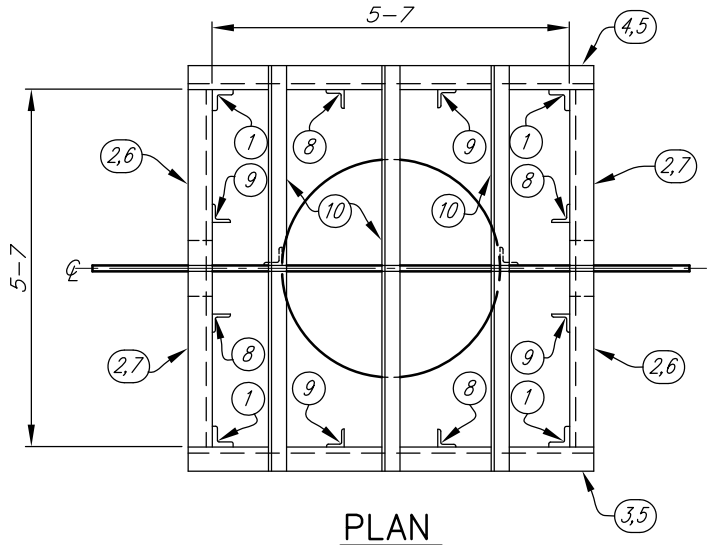


PLAN

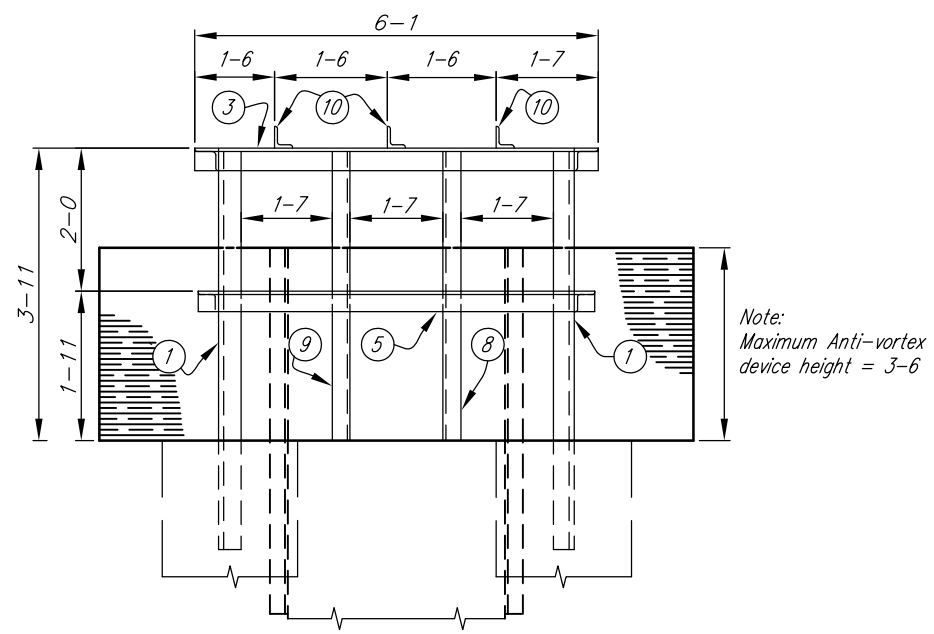


RIGHT SIDE ELEVATION

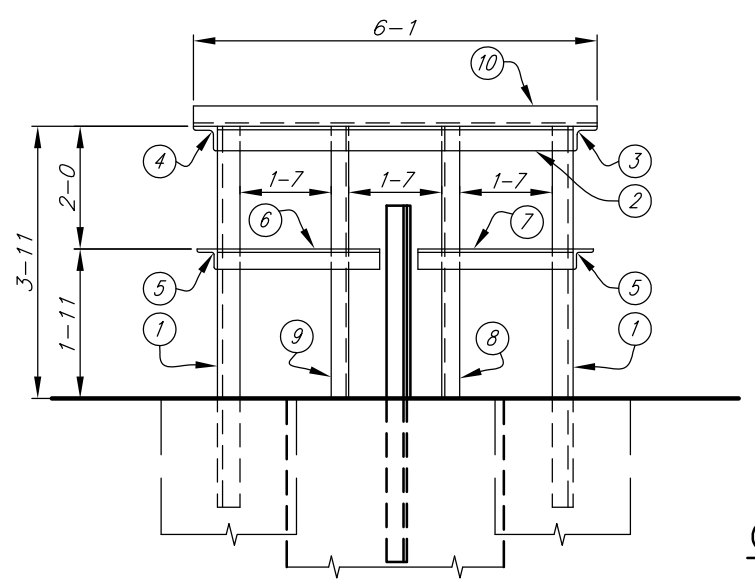


UPSTREAM ELEVATION

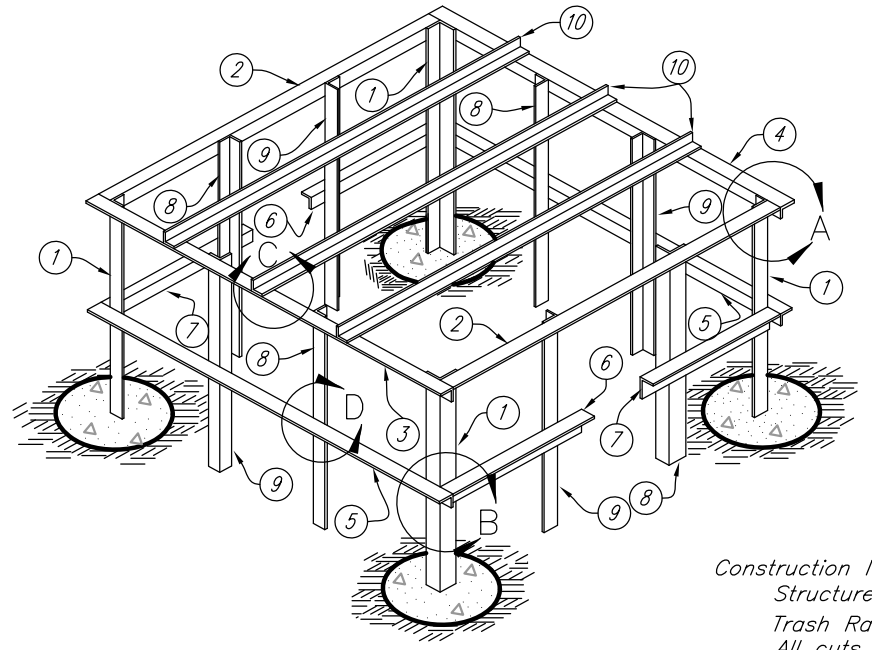


ISOMETRIC VIEW

Not to Scale

| BILL OF MATERIALS | | | LENGTHS |
|---|---|---|---|
| Mark | Quantity | Item | 54" Diam. |
| 1 | 4 | ∠'s 3"x3"x5/16" | 4–11 |
| 2 | 2 | " | 5–7 |
| 3 | 1 | " | 6–1 |
| 4 | 1 | " | 6–1 |
| 5 | 2 | ∠'s 2"x2"x3/16" | 5–11 |
| 6 | 2 | " | 2–6 |
| 7 | 2 | " | 2–6 |
| 8 | 4 | " | 3–11 |
| 9 | 4 | " | 3–11 |
| 10 | 3 | " | 6–1 |
| | | | |
| | | | |
| | | | |
| | 46 | 1/2" ø Machine Bolts w/Lock Washers and Hex. Nuts | 0–1 1/2 |
| | | | |
| | | Concrete_ _ _ _ _ _0.6 Cu.Yd. | |

Construction Notes:

Structure is symmetrical about ℄.

Trash Rack to be fabricated of steel angles, bolted together with 1/2" diam. machine bolts.

All cuts shall be saw cuts.

All holes for bolts shall be 1/16 inch larger than bolt diam.

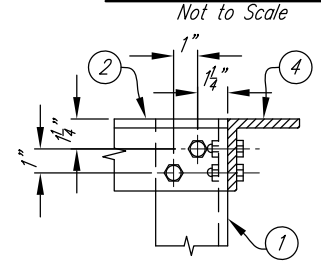


FRONT ELEV.

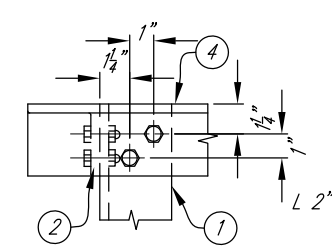


SIDE ELEV.

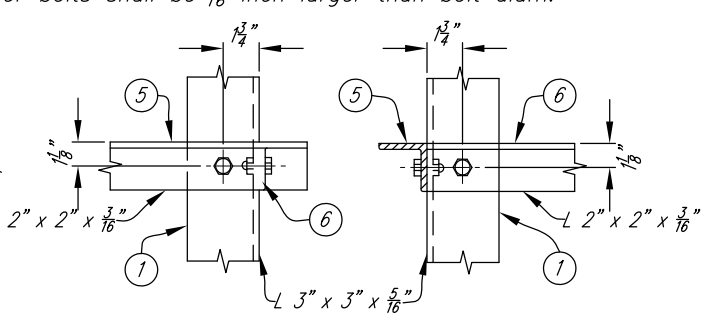


SIDE ELEV. FRONT ELEV.

VIEW "B"

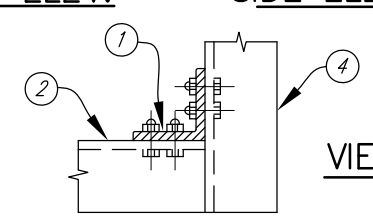

PLAN

VIEW "A"

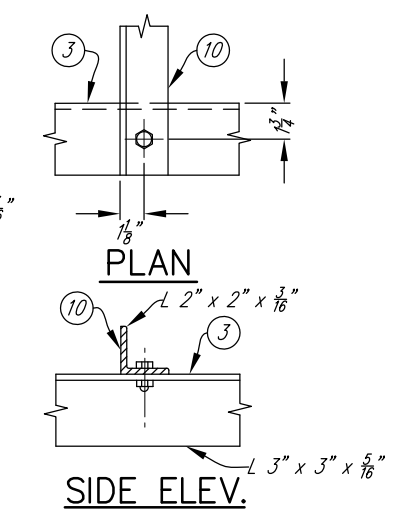


PLAN

SIDE ELEV.

VIEW "C"

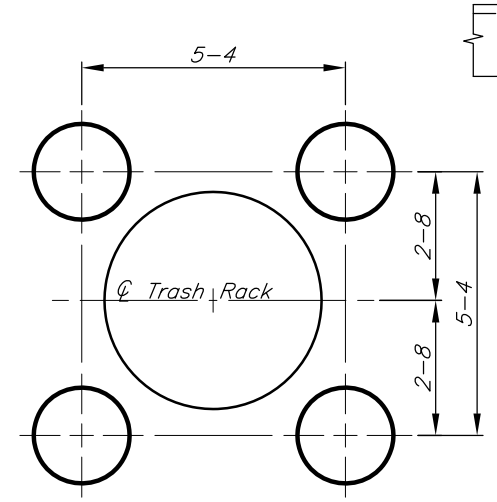


CONCRETE FOOTING LAYOUT

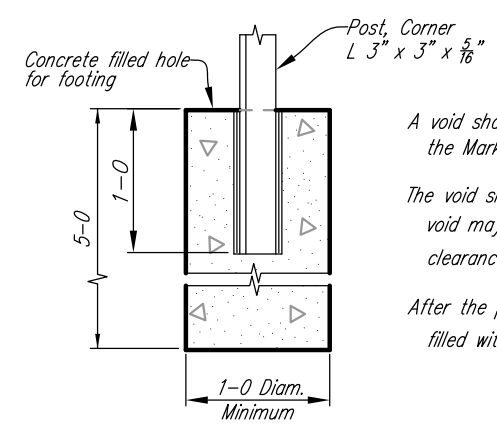


FOOTING DETAIL

A void shall be formed in the concrete footings to receive the Mark (1) posts.

The void shall be one foot deep. The cross section of the void may be triangular, rectangular or circular with 1/4" clearance between the concrete and the Mark (1) posts.

After the posts are installed, the remaining voids shall be filled with bituminous mastic.

Not to Scale

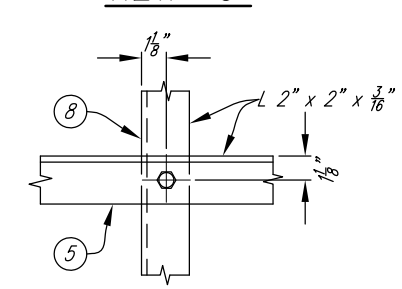


SIDE ELEV.

VIEW "D"

STANDARD DWG. IA–1110

DATE Oct. 2012 | PAGE 1 OF 1

Date

Designed

Drawn

Checked

Approved

DETAILS OF TRASH RACK FOR 54" C.M. PIPE VERTICAL INLET

NRCS

Natural Resources Conservation Service

United States Department of Agriculture

File No.

Drawing No.

Sheet of