GAGE OF METAL BAFFLE AND DIMENTSIONS OF ANGLE BRACE							
Diam. of Pipe, D	Sheet Thick. of Baffle		Angle Brace Dimensions (Inches)				
	Steel	Al.	a	b	c	d	e
18"	.064	.135	10	6	9	8	5 1/3
21"	.064	.135	10	7 1/8	9	9 1/2	5 1/3
24"	.079	.135	13	8 1/4	12	11	8
30"	.079	.164	13	10 1/2	12	14	8
36"	.109	.164	13	12 3/4	12	17	8
42"	.109	.164	17	15	15	20	10 2/3
48"	.109	.164	17	17 1/4	15	23	10 2/3

Metal Baffle shall have the same coating as the pipe to which it is attached. Where Metal Baffle is fabricated of more than one piece of metal, the separate pieces shall be securely fastened to each other. Sharp corners shall be removed. At contractors option, Metal Baffle may be made of corrugated or sheet metal and shaped circular, square or as shown.

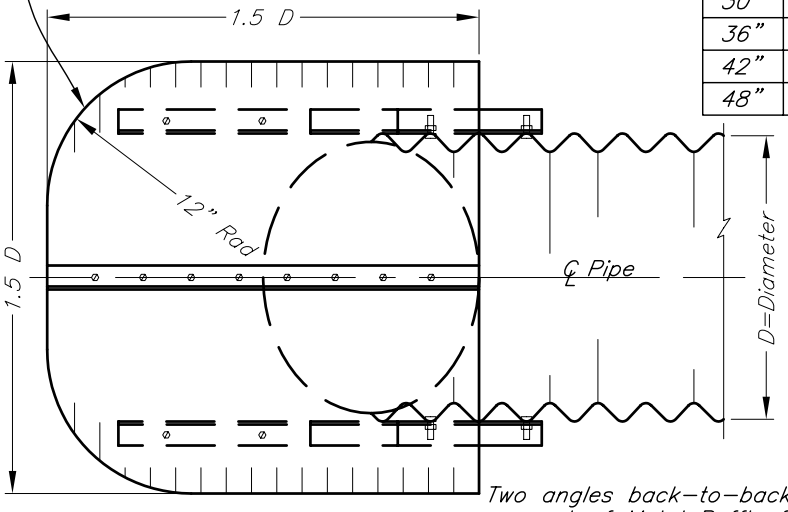

PLAN

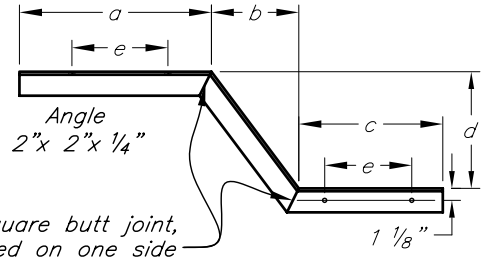

ANGLE BRACE DETAIL

Two angles back-to-back for support of Metal Baffle for 36" to 48" diam. Pipe. Bolt angles to each other with 3 bolts. Bolt angles to Baffle with bolts staggered at every other corrugation.

(1 left and 1 right required for each baffle)

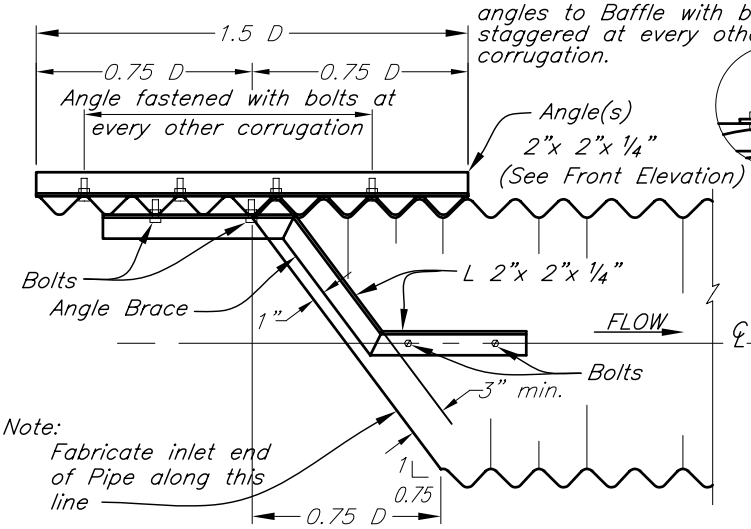

SIDE ELEVATION

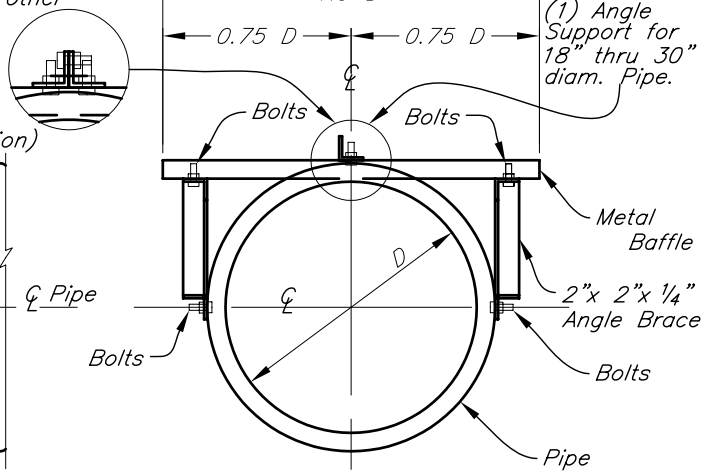

FRONT ELEVATION

Notes:
- USE ALUMINUM BAFFLE AND ANGLES WITH ALUMINUM PIPE.
- USE STEEL BAFFLE AND ANGLES WITH STEEL OR IRON PIPE.
- All bolts shall be 1/2"x 1 1/2" with nut and split washers.
- All holes for bolts shall be drilled 9/16" diameter.
- All nuts, bolts and washers shall be galvanized, cadmium plated, or stainless steel.
- All cuts shall be saw or shear cuts.
- Holes in the angle brace shall be spaced and located to match corrugations in pipe and baffle.
- Steel angles shall be galvanized.

STANDARD DWG. IA-1211

DATE *July 2008* | SHEET *1* OF *1*

NRCS
Natural Resources Conservation Service
United States Department of Agriculture

DETAILS OF HOOD INLET FOR ANNULAR OR SPIRAL C.M. PIPE 18-48 INCH DIAM.

Designed _____ Date
Drawn _____
Checked _____
Approved _____

File Name
Drawing Name
Sheet of