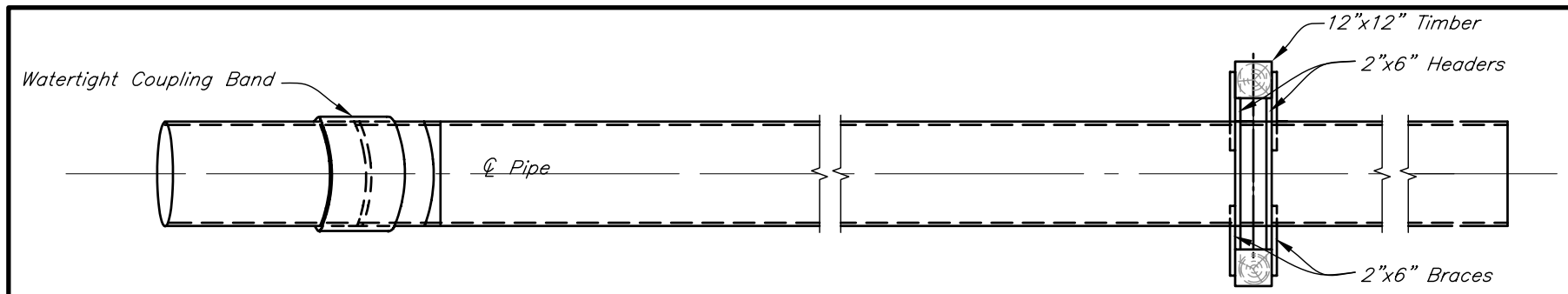

PLAN

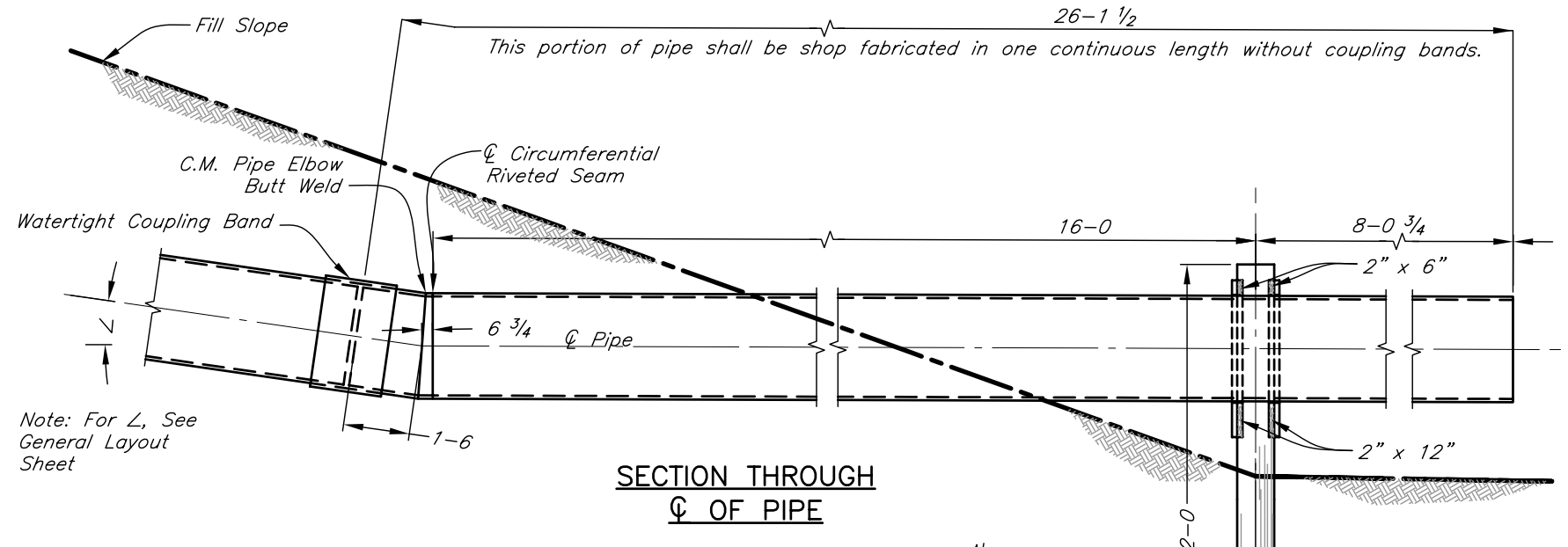

SECTION THROUGH
℄ OF PIPE

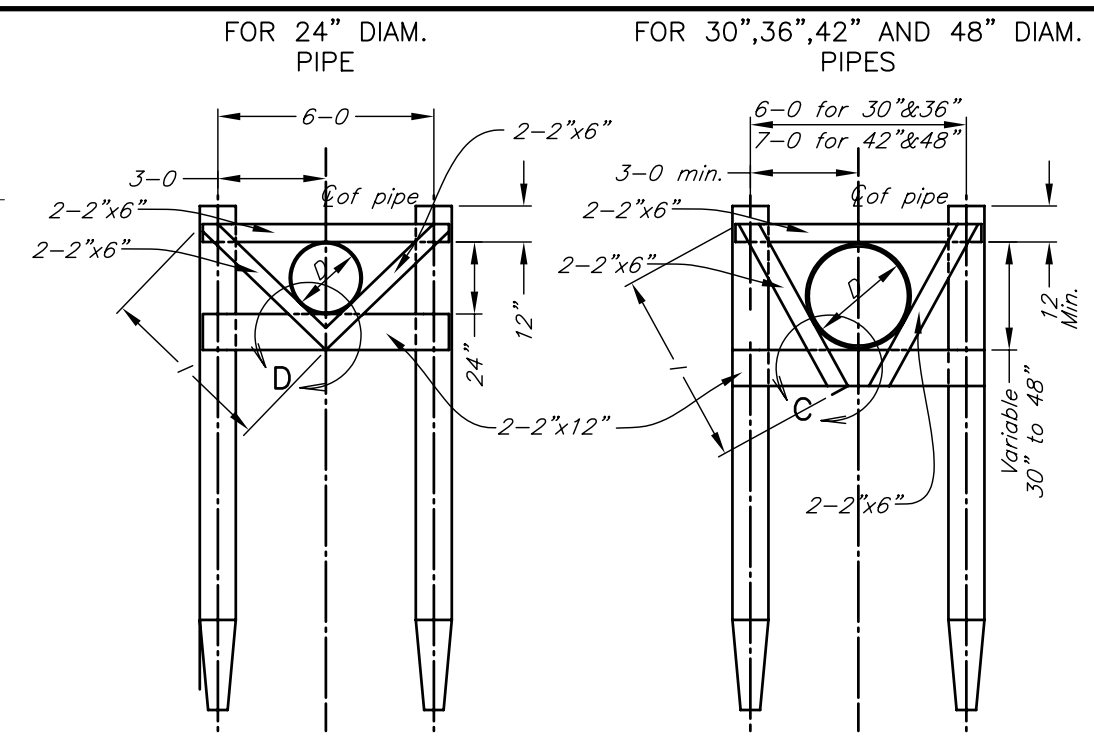

BENT ELEVATION
(Not to Scale)

Notes:

Round timbers may be substituted for 12" x 12" timbers.

Round timbers shall conform to the requirements of ASTM D 25. The minimum circumference 3 feet from the butt shall be 38 inches.

Round timbers shall be treated in accordance with the requirements of ASTM D 1760.

Steel Strap shall be painted in accordance with Construction Specification 82 or IA–81.

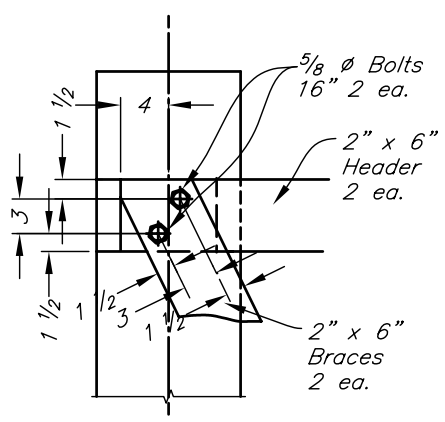

VIEW A

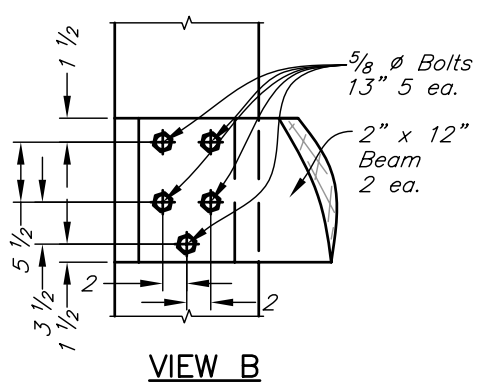

VIEW B

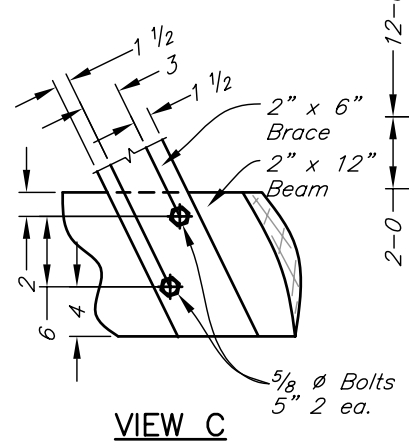

VIEW C

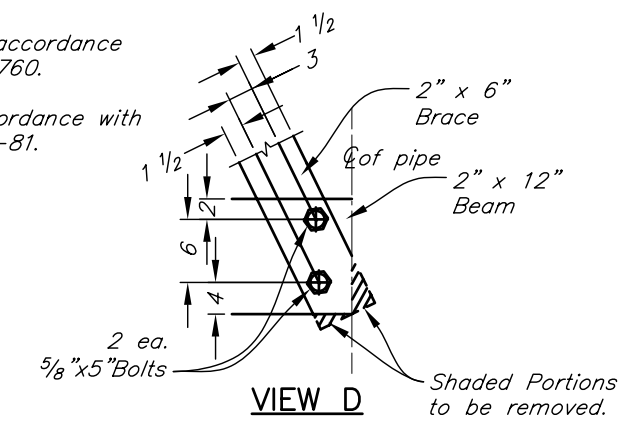

VIEW D

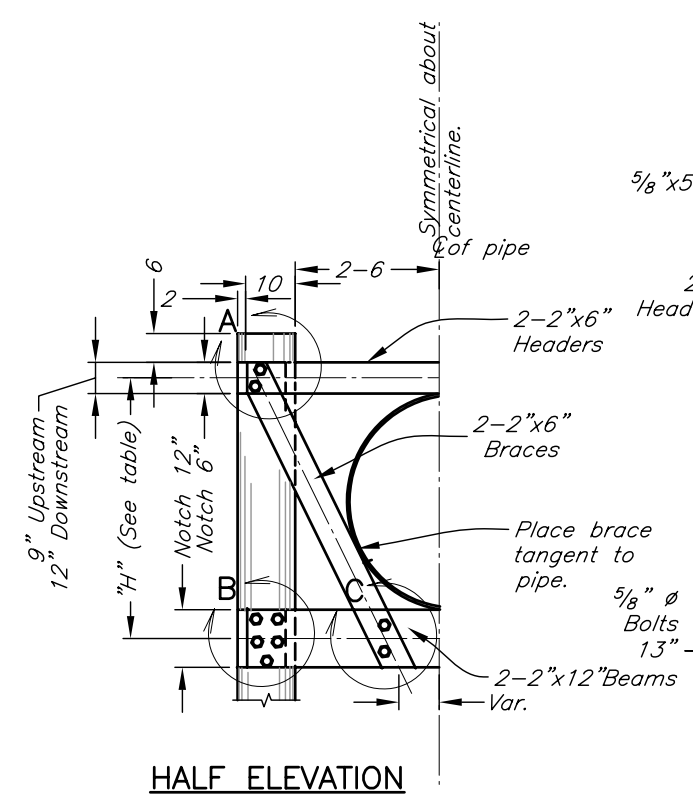

HALF ELEVATION

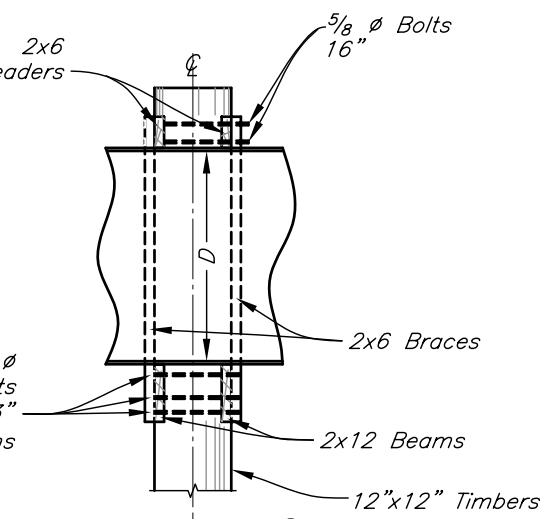

SECTION ON ℄
(Not to Scale)

TIMBER SUPPORT DIMENSIONS (APPROX.)					
D	24	30	36	42	48
H	2–10	3–4	3–10	4–4	4–10
I	4–7	4–10	5–6	6–1	6–3

BILL OF MATERIALS FOR TIMBER OUTLET SUPPORT							
				24" to 36"		42" to 48"	
ITEM	GRADE	REQD.	SIZE	LENGTH	TOT. LIN. FT.	LENGTH	TOT. LIN. FT.
Timber	1400#f	2	12" x 12"	14–0	28–0	14–0	28–0
Headers	1400#f	2	2" x 6"	6–8	13–4	7–8	15–4
Beams	1400#f	2	2" x 12"	6–8	13–4	7–8	15–4
Braces	1200#f	4	2" x 6"	(See "I" dimension in Table)			
Bolts	Galv	8	5/8" ø	5"		5"	
Bolts	Galv	10	5/8" ø	13"		13"	
Bolts	Galv	4	5/8" ø	16"		16"	
Nuts	Galv	22	5/8" ø				
Washers	Galv	44	5/8" ø				

STANDARD DWG. IA–1148

DATE *July 2008* | SHEET *1* OF *1*

Date

Designed

Drawn

Checked

Approved

DETAILS OF PROPPED OUTLET WITH TIMBER SUPPORT
24" – 48" DIAM. C.M. PIPE

NRCS
Natural Resources Conservation Service
United States Department of Agriculture

File No.

Drawing No.

Sheet of