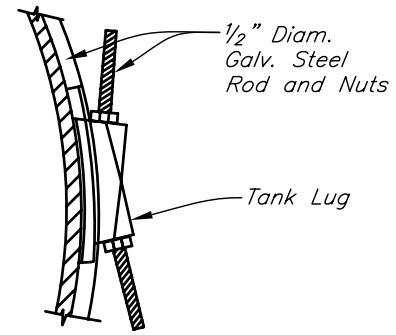

DETAIL OF TANK LUG

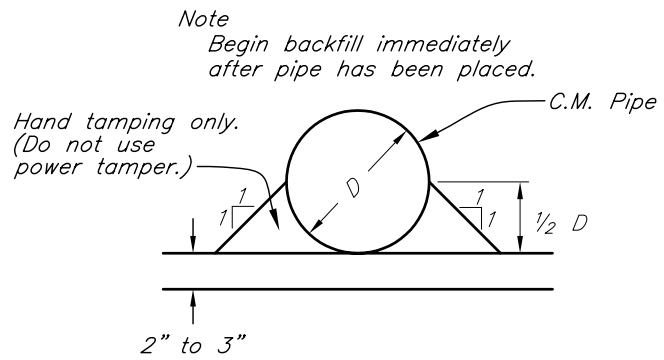

CORRUGATED OR SMOOTH METAL PIPE
PRINCIPAL SPILLWAY
BACKFILL DETAIL

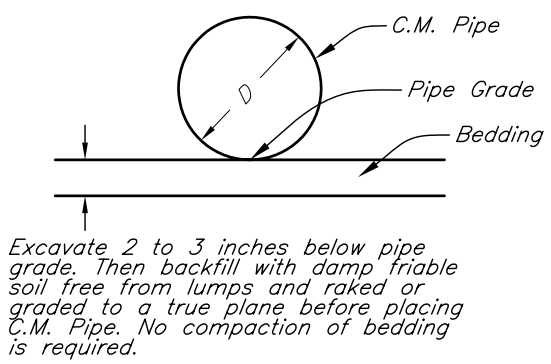

CORRUGATED OR SMOOTH METAL PIPE
PRINCIPAL SPILLWAY
BEDDING DETAIL

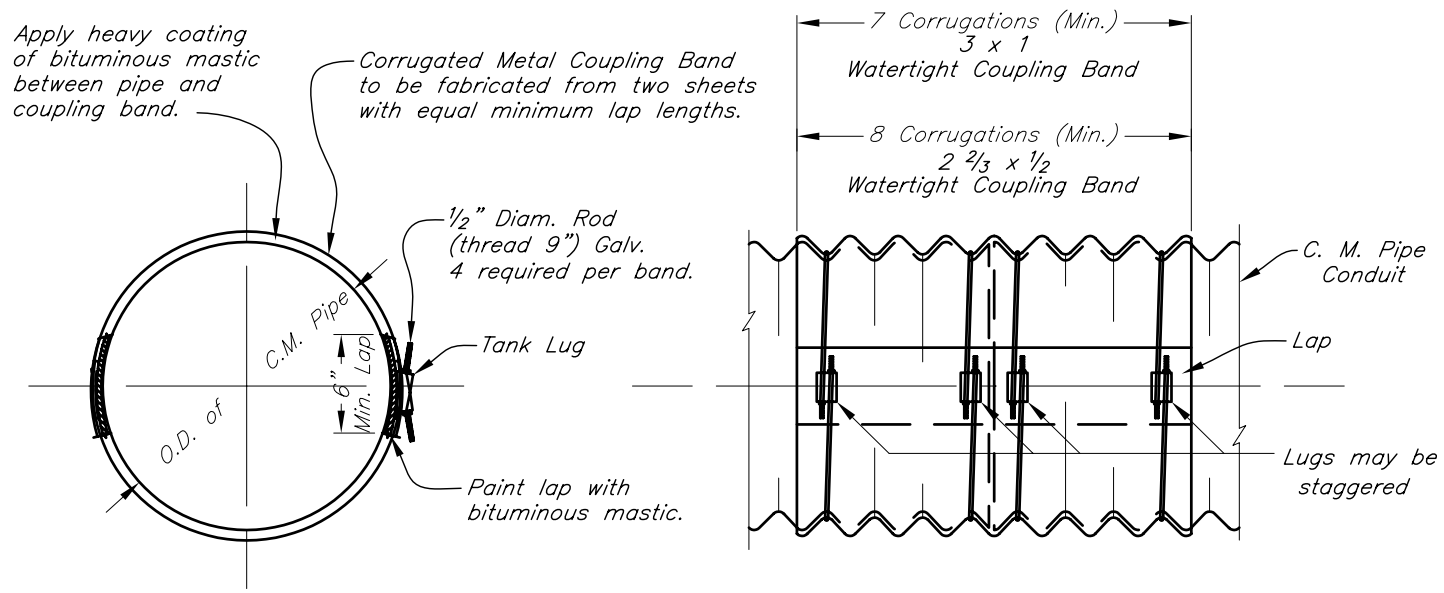

NOTES:

1. See spillway general layout drawing for location of watertight bands.
2. Metal treatment, thickness, and coating of watertight coupling bands shall be as specified for the pipe.
3. Rivets in longitudinal seams of C.M. Pipe under watertight coupling band shall be flat head or omitted and seams welded inside and outside with a continuous ⅛" fillet weld.
4. All welded areas shall be treated as specified for "Repair of Damaged Coatings." Refer to Construction Specification 51A or IA–51.
5. Rods and lugs on coupling bands shall be installed according to the drawing; the nuts on the rods shall be tightened equally on either side of the lug and shall be retightened at least twice after initial installation. Striking each rod sharply with a hammer at several locations around the circumference of the rod will help to draw the band tighter.

DETAILS OF WATERTIGHT COUPLING BAND

STANDARD DWG. IA–1227

DATE July 2008 | SHEET 1 OF 1

Date
Designed
Drawn
Checked
Approved

DETAILS OF WATERTIGHT COUPLING BAND, TANK LUG, BEDDING AND BACKFILL

NRCS
Natural Resources Conservation Service
United States Department of Agriculture

File No.
Drawing No.
Sheet of