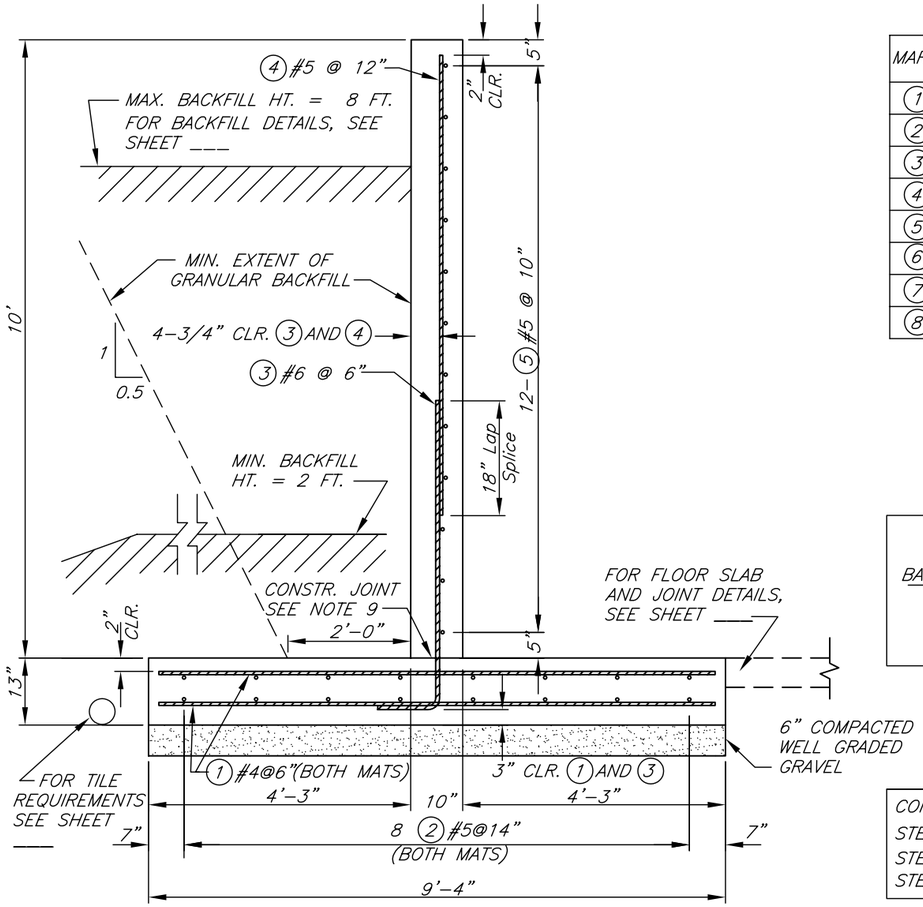

WALL SECTION

STEEL SCHEDULE

MARK	SIZE	QUAN.	TYPE	A	B	C	LENGTH	TOTAL LENGTH
①	#4		STR	---	---	---	8'-11"	
②	#5		STR	---	---	---		
③	#6		2	1'-0"	5'-0"	---	6'-0"	
④	#5		STR	---	---	---	7'-2"	
⑤	#5		STR	---	---	---		
⑥	#5		20	---	1'-0"	4'-0"	5'-0"	
⑦	#4		20	---	2'-0"	2'-0"	4'-0"	
⑧	#4		STR	---	---	---	3'-0"	
							#4 Bars Total Length	
							#5 Bars Total Length	
							#6 Bars Total Length	

STEEL DETAILS

BAR SIZE	INSIDE BEND DIAMETER (D) INCHES	LONGITUDINAL STEEL LAP SPLICE LENGTH, INCHES (MIN.) Wall bars	Footing bars
#4	3	–	–
#5	3-3/4	24	18
#6	4-1/2	–	–

Total length of wall (measured along ℄ wall) = _____ ft.

ESTIMATED QUANTITIES

CONCRETE (0.683 CU.YD./FT OF WALL)=_____ CU.YD.
STEEL #4 BARS (0.668 LB./FT.)=_____ LB.
STEEL #5 BARS (1.043 LB./FT.)=_____ LB.
STEEL #6 BARS (1.502 LB./FT.)=_____ LB.

Steel quantity include splice lengths? Y__ N__

Adapted from Wisconsin drawing WI-594

CONDITIONS OF USE

Allowable backfill height = 2 to 8 ft
Soil backfill type = gravel-sand mix, or coarse sand, with less than 50% fines
Water table below footing
Machinery surcharge load allowed on soil or pavement slab
Not designed to support buildings or roofs

MATERIALS

Concrete compressive strength = 4,000 psi
Reinforcing steel shall be Grade 60
Concrete and reinforcing steel shall meet requirements of Construction Specification IA-31.

WALL DESIGN LOADINGS

Manure load inside = 65 psf/ft EFP (Equivalent Fluid Pressure)
Soil backfill density = 110 pcf
Soil backfill load = 60 psf/ft EFP
Design surcharge load = 120 psf horizontal pressure (modeling machinery on soil)

WALL SLIDING RESTRAINT REQUIREMENTS

Assumptions:
5-inch thick floor slab, factor of safety against sliding 1.5.
Coefficient of friction (soil/concrete) = 0.4 (well-graded, angular gravel/sand base)

Backfill Height, ft.	Min. Floor Slab Length, ft.*	Backfill Height, ft.	Min. Floor Slab Length, ft.*
8	100	4**	3
7	68	3**	5
6	40	2**	7
5**	16		

* Min. floor slab length for restraint is not required if T-wall forms a tank with opposing wall having approximately the same backfill height.

**When backfill height is 5 ft or less, floor slab shall be tied to wall footing with tension steel (deformed bar reinforcement). Provide minimum 0.07 sq.in./ft (equiv. #3 @ 18") as 36 in. long tie bars, or extend slab steel into footing a minimum of 18 inches.

GENERAL DESIGN NOTES

1. Design loadings and soil pressures based upon criteria found in Conservation Practice Standard 313 (Waste Storage Facility).
2. Drainage shall be away from the wall.
3. Minimum width of backfill against the wall shall be equal to or greater than the backfill height, but not less than 5 ft.
4. Backfill height of 4 ft or more is recommended for frost protection.
5. Minimum required subgrade bearing capacity = 2000 psf.
6. Mark ② and ⑤ bars shall extend to 2-3 inches from edge of concrete at ends of straight wall sections.
7. Mark ③ and ④ bars shall be placed a maximum of 3 inches from wall end or inside face of corner.
8. Footing slab reinforcement at corners: for Inside Corner Region (see detail), extend Mark ① (transverse) bars into this region from both sides of corner. Extend Mark ② (longitudinal) bars into Inside Corner to inside face of wall. For Outside Corner Region, discontinue Mark ① bars. Extend Mark ② bars into Outside Corner Region from both sides of corner, to 2-3 inches from edge of slab.
9. Construction joint shall be completed as described in Const. Spec. IA-31. Surface of construction joint shall be roughened to approximately 1/4" depth.
10. Important: steel location (clear distance from face of wall or slab) must be carefully maintained as shown on the drawings in order for structure to achieve its design load-carrying capacity.

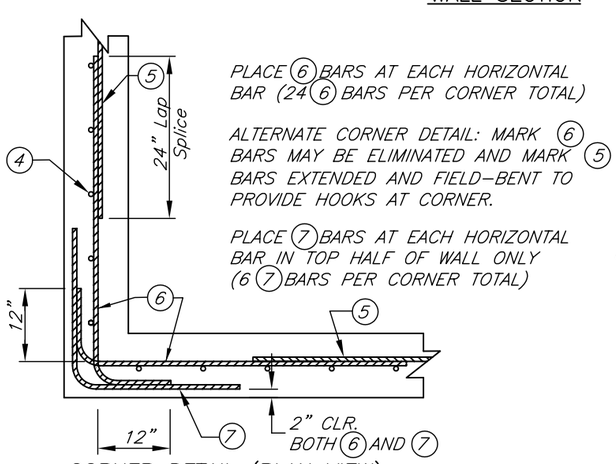

CORNER DETAIL (PLAN VIEW)
Upper half of wall shown

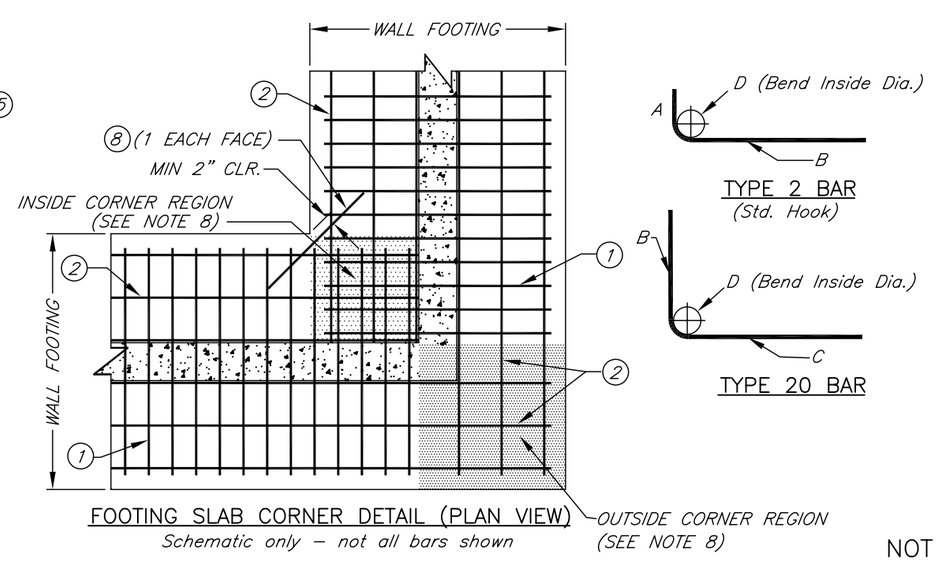

FOOTING SLAB CORNER DETAIL (PLAN VIEW)
Schematic only – not all bars shown

NOT TO SCALE

STANDARD DWG. NO. IA-1695b

DATE 02/08 | SHEET 1 OF 1

Designed . Date 07/08
Drawn JGibbs
Checked
Approved

10-FT HIGH REINFORCED CONCRETE "T" WALL
2' TO 8' GRANULAR BACKFILL, WITH SURCHARGE
10" WALL THICKNESS

NRCS
Natural Resources Conservation Service
United States Department of Agriculture

File No. IA-1695b.dwg
Drawing No. ----
Sheet of