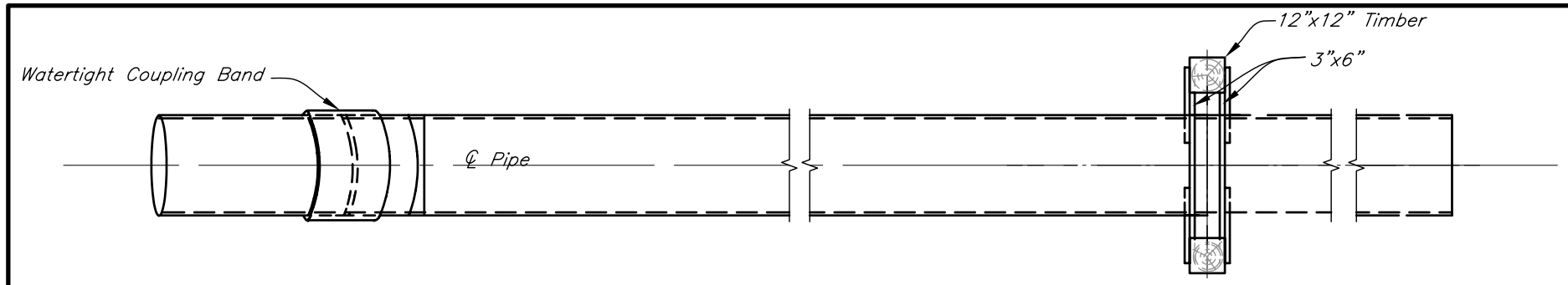

PLAN

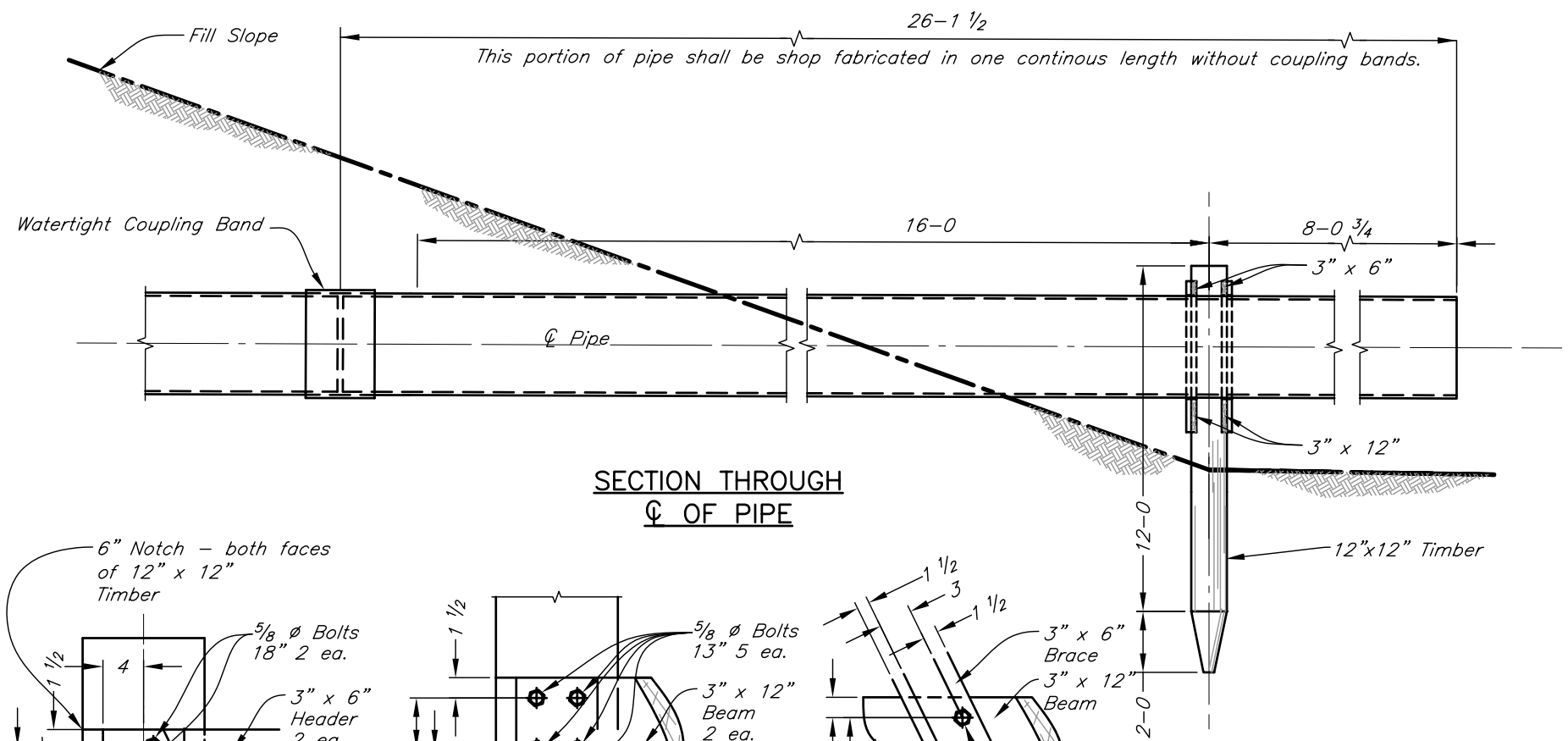

SECTION THROUGH
℄ OF PIPE

VIEW A

VIEW B

VIEW C

FOR 54" DIAM. PIPES

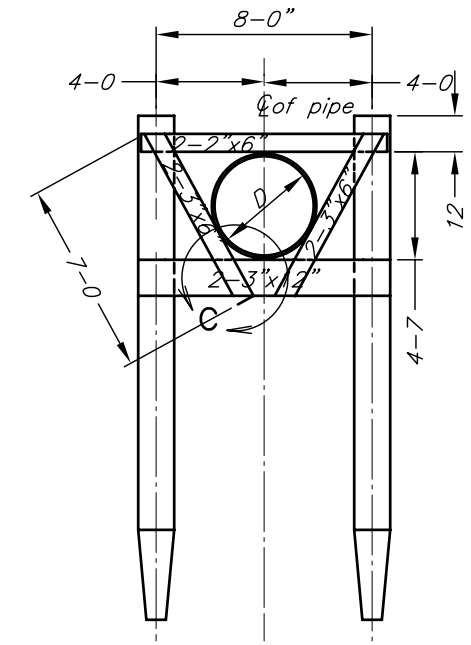

BENT ELEVATION
(Not to Scale)

Notes:

Round timbers may be substituted for 12" x 12" timbers.

Round timbers shall conform to the requirements of ASTM D 25. The minimum circumference 3 feet from the butt shall be 38 inches.

Round timbers shall be treated in accordance with the requirements of ASTM D 1760.

Steel Strap shall be painted in accordance with Construction Specification 82 or IA–81.

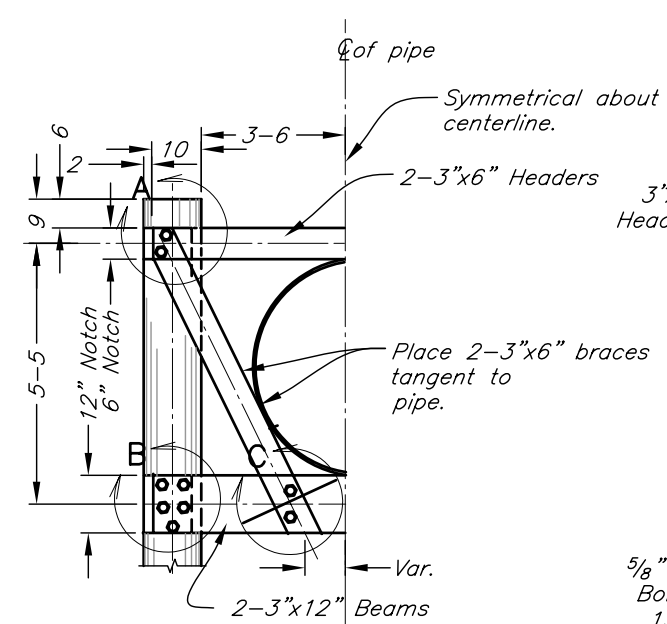

HALF ELEVATION

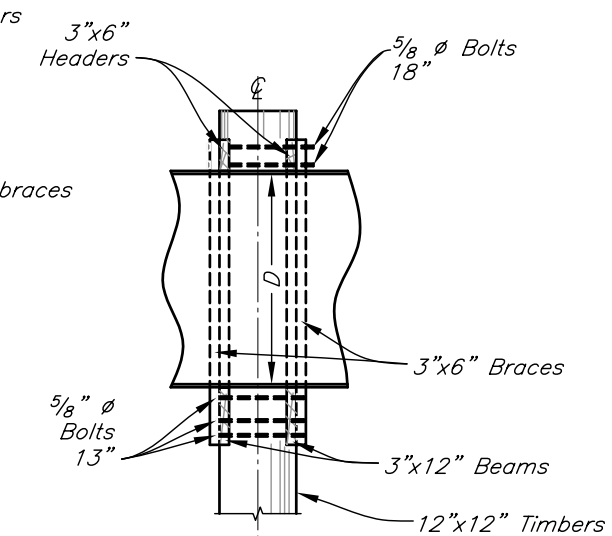

SECTION ON ℄
(Not to Scale)

BILL OF MATERIALS FOR OUTLET SUPPORT TIMBER

				54"			
ITEM	GRADE	REQD.	SIZE	LENGTH	TOT. LIN. FT.		
Timber	1400#f	2	12" x 12"	14–0	28–0		
Headers	1400#f	2	3" x 6"	8–8	17–4		
Beams	1400#f	2	3 x 12"	8–8	17–4		
Braces	1200#f	4	3" x 6"	7–0	28–0		
Bolts (Galv)		8	5/8" ø	5"			
Bolts (Galv)		10	5/8" ø	13"			
Bolts (Galv)		4	5/8" ø	16"			
Nuts (Galv)		22	5/8" ø				
Washers		44	5/8" ø				

STANDARD DWG. IA–1151

DATE July 2008 | SHEET 1 OF 1

Date
Designed
Drawn
Checked
Approved

DETAILS OF PROPPED OUTLET WITH TIMBER SUPPORT
54" DIAM. C.M. PIPE

NRCS
Natural Resources Conservation Service
United States Department of Agriculture

File No.

Drawing No.

Sheet of