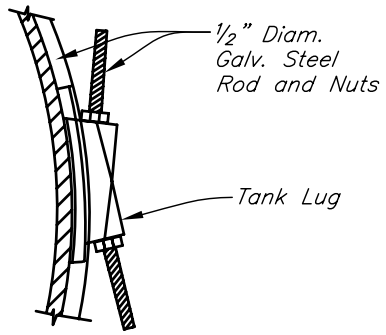

DETAIL OF TANK LUG

NOTES:

1. See spillway general layout drawing for location of watertight bands.
2. Metal treatment, thickness, and coating of watertight coupling bands shall be as specified for the pipe.
3. Rivets in longitudinal seams of C.M. Pipe under watertight coupling band shall be flat head or omitted and seams welded inside and outside with a continuous ⅛" fillet weld.
4. All welded areas shall be treated as specified for "Repair of Damaged Coatings." Refer to Construction Specification 51A or IA–51.
5. Rods and lugs on coupling bands shall be installed according to the drawing; the nuts on the rods shall be tightened equally on either side of the lug and shall be retightened at least twice after initial installation.

Striking each rod sharply with a hammer at several locations around the circumference of the rod will help to draw the band tighter.

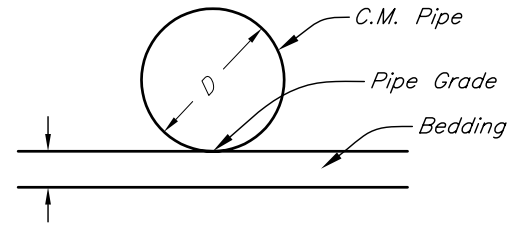

Excavate 2 to 3 inches below pipe grade. Then backfill with damp friable soil free from lumps and raked or graded to a true plane before placing C.M. Pipe. No compaction of bedding is required.

CORRUGATED OR SMOOTH METAL PIPE PRINCIPAL SPILLWAY BEDDING DETAIL

Note
Begin backfill immediately after pipe has been placed.

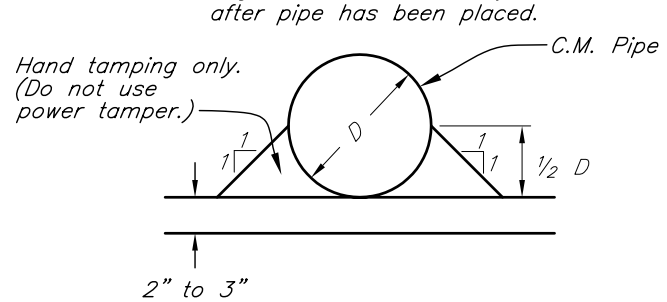

CORRUGATED OR SMOOTH METAL PIPE PRINCIPAL SPILLWAY BACKFILL DETAIL

Metal Baffle shall have the same coating as the pipe to which it is attached. Where Metal Baffle is fabricated of more than one piece of metal, the separate pieces shall be securely fastened to each other. Sharp corners shall be removed. At contractors option, Metal Baffle may be made of corrugated or sheet metal and shaped circular, square or as shown.

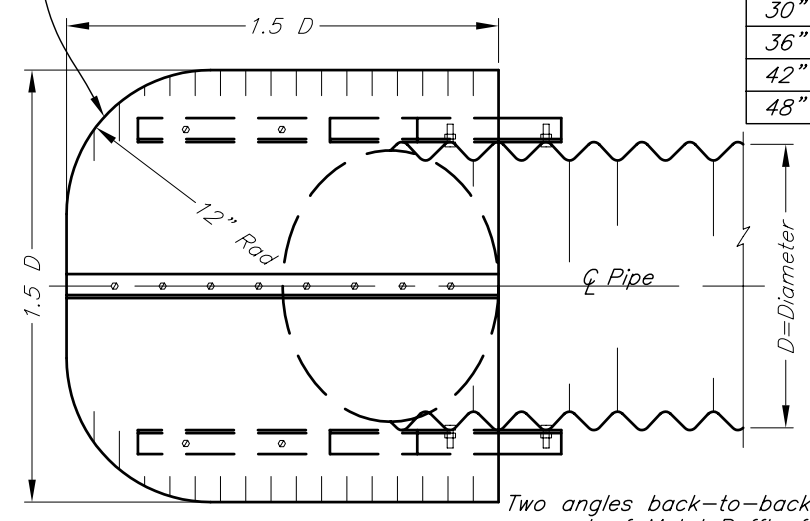

PLAN

Two angles back–to–back for support of Metal Baffle for 36" to 48" diam. Pipe. Bolt angles to each other with 3 bolts. Bolt angles to Baffle with bolts staggered at every other corrugation.

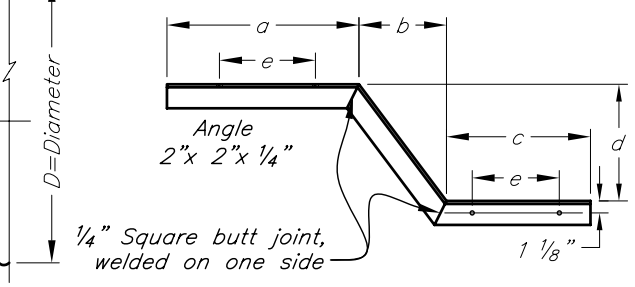

ANGLE BRACE DETAIL

(1 left and 1 right required for each baffle)

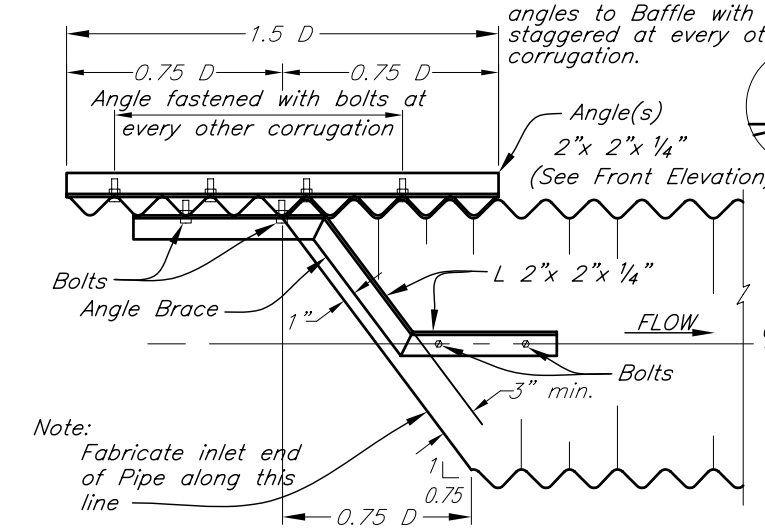

SIDE ELEVATION

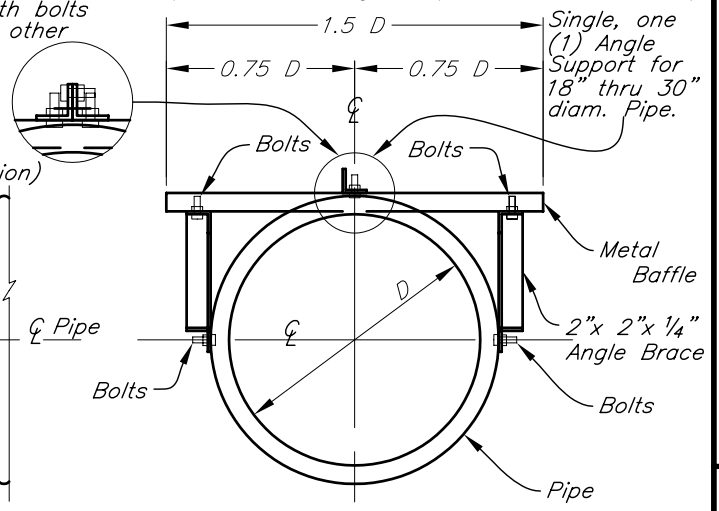

FRONT ELEVATION

Notes:
USE ALUMINUM BAFFLE AND ANGLES WITH ALUMINUM PIPE.
USE STEEL BAFFLE AND ANGLES WITH STEEL OR IRON PIPE.
All bolts shall be ½"x 1 ½" with nut and split washers.
All holes for bolts shall be drilled 9/16" diameter.
All nuts, bolts and washers shall be galvanized, cadmium plated, or stainless steel.
All cuts shall be saw or shear cuts.
Holes in the angle brace shall be spaced and located to match corrugations in pipe and baffle.
Steel angles shall be galvanized.

GAGE OF METAL BAFFLE AND DIMENTSIONS OF ANGLE BRACE

Diam. of Pipe, D	Sheet Thick. of Baffle		Angle Brace Dimensions (Inches)				
	Steel	Al.	a	b	c	d	e
18"	.064	.135	10	6	9	8	5 ⅓
21"	.064	.135	10	7 ⅛	9	9 ½	5 ⅓
24"	.079	.135	13	8 ¼	12	11	8
30"	.079	.164	13	10 ½	12	14	8
36"	.109	.164	13	12 ¾	12	17	8
42"	.109	.164	17	15	15	20	10 ⅔
48"	.109	.164	17	17 ¼	15	23	10 ⅔

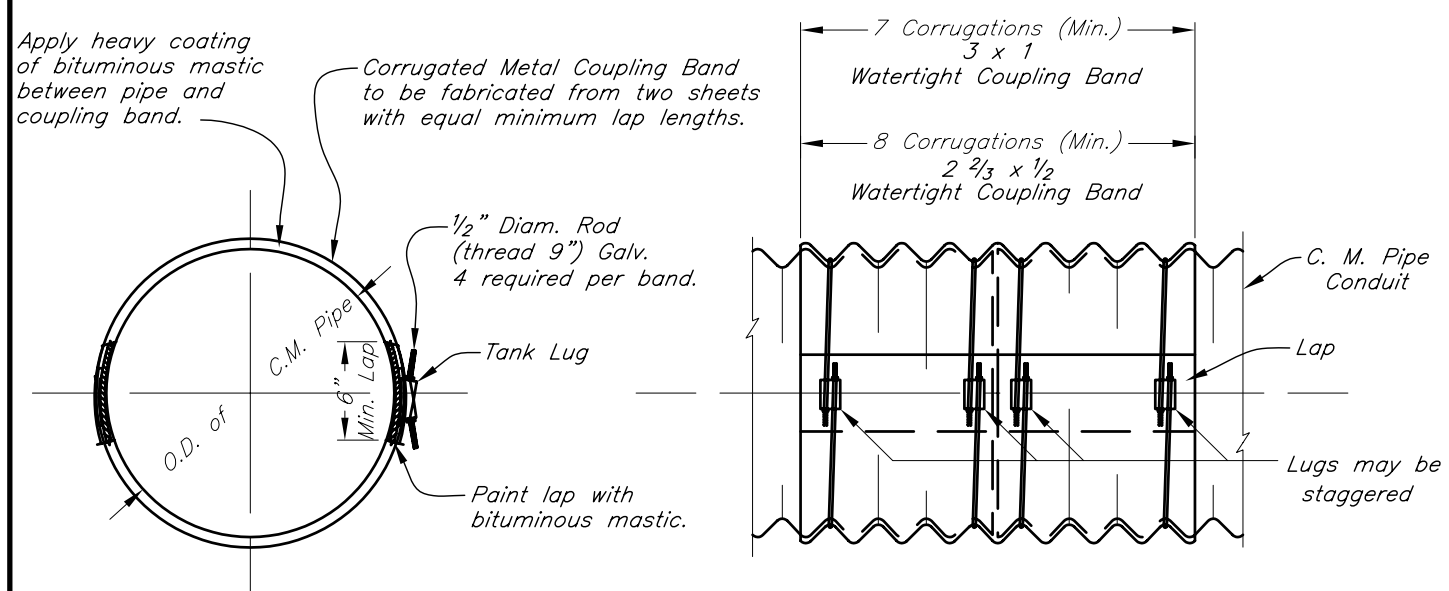

DETAILS OF WATERTIGHT COUPLING BAND

DETAILS OF HOOD INLET FOR ANNULAR OR SPIRAL C. M. PIPE

STANDARD DWG. IA–1225

DATE July 2008 | SHEET 1 OF 1

Date
Designed
Drawn
Checked
Approved

DETAILS 18"–48" DIAM
CORRUGATED METAL PIPE

NRCS
Natural Resources Conservation Service
United States Department of Agriculture

File No.
Drawing No.
Sheet of