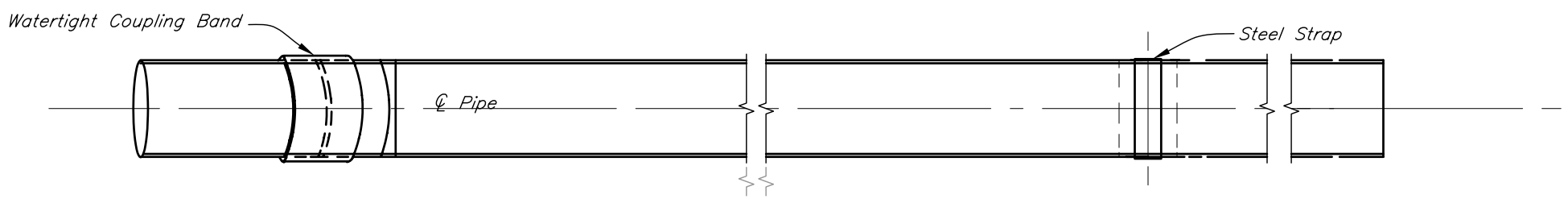

PLAN

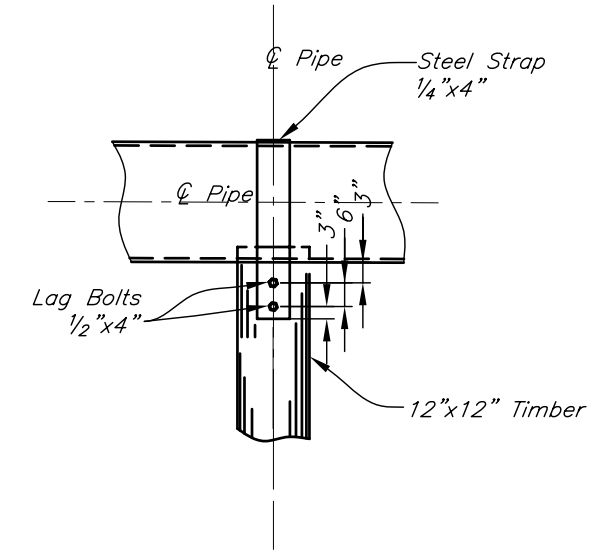

STRAP DETAILS
(Not to Scale)

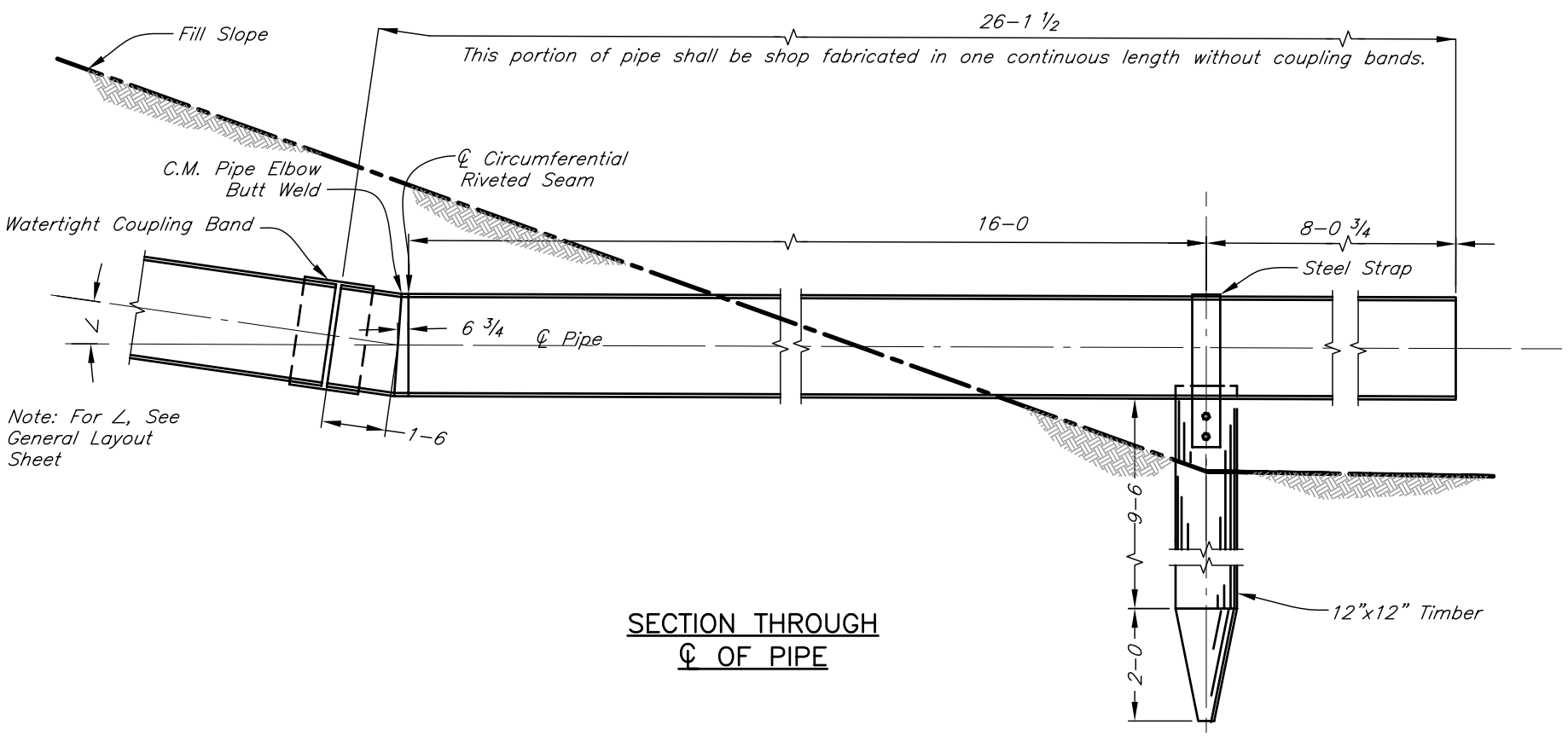

SECTION THROUGH
℄ OF PIPE

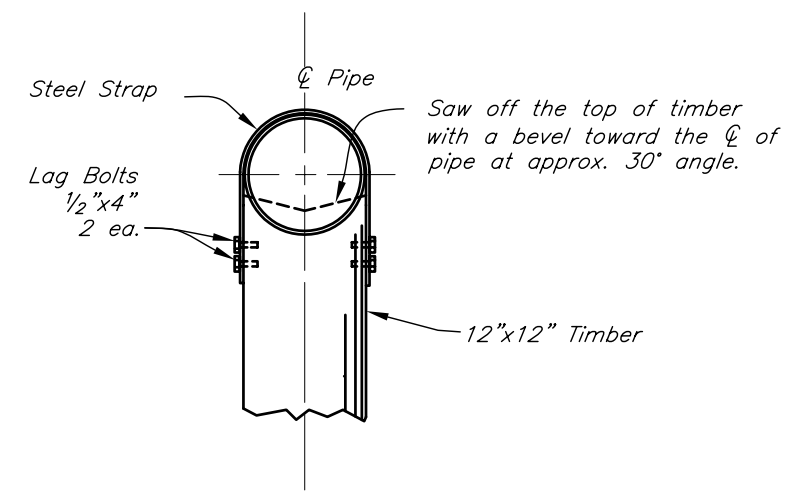

BENT ELEVATION
(Not to Scale)

BILL OF MATERIALS FOR TIMBER OUTLET SUPPORT	
ITEM	Quantity
12"X12" Timber, 12' Length	1
Steel Strap 1/4"x4", Length	4'–7"
Lag Bolts, Galvanized, 1/2"x4"	4

Notes:

Round timbers may be substituted for 12" x 12" timbers.

Round timbers shall conform to the requirements of ASTM D 25. The minimum circumference 3 feet from the butt shall be 38 inches.

Round timbers shall be treated in accordance with the requirements of ASTM D 1760.

Steel Strap shall be painted in accordance with Construction Specification 82 or IA–81.

STANDARD DWG. IA–1143

DATE July 2008 | SHEET 1 OF 1

Date
Designed
Drawn
Checked
Approved

DETAILS OF PROPPED OUTLET WITH TIMBER SUPPORT
12" DIAM. C.M. PIPE

NRCS
Natural Resources Conservation Service
United States Department of Agriculture

File No.
Drawing No.
Sheet of