SURFACE DRAIN PLUG DIMENSION TABLE								
Plug ID	Top of Fill Elevation	Top Width T (ft.)	Side Slope S1 (H:V) (min. 3:1)	Slide Slope S2 (H:V) (min. 3:1)	Core Trench Depth, D (ft.)	Core Trench Width, W (ft.)	Excavation Volume (Cu. Yd.)	Earthfill Volume (Cu. Yd.)

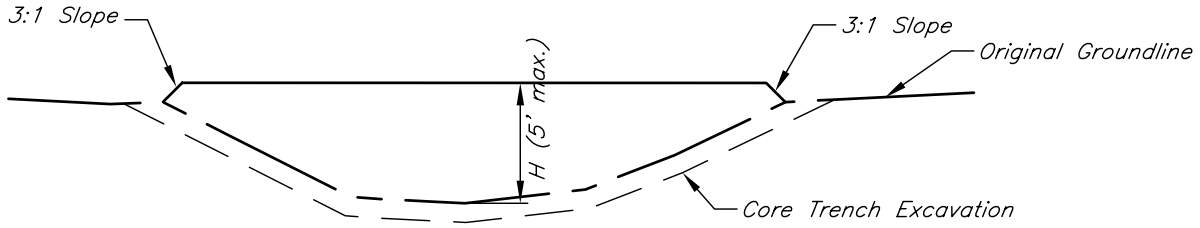

TYPICAL SECTION ALONG CENTERLINE OF FILL

(NOT TO SCALE)

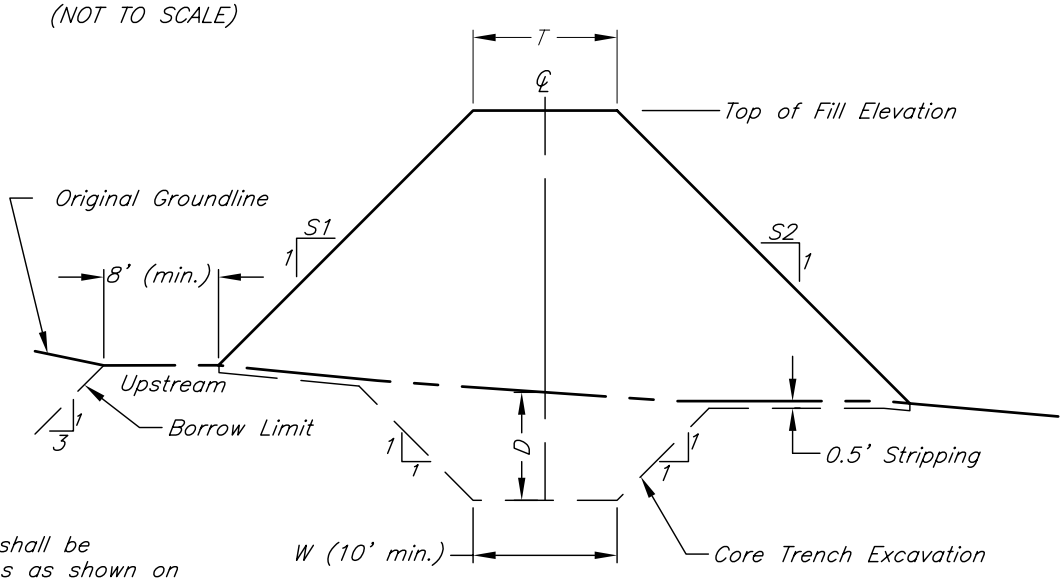

TYPICAL SECTION

(NOT TO SCALE)

NOTES:

1. Surface drain plug(s) shall be constructed at locations as shown on the plan view drawing for the site or as staked in the field.
2. Borrow shall be obtained from locations shown on the plans or as staked in the field.
3. Earthfill placement shall comply with Construction Specification IA–23.
4. The plug(s) and all disturbed areas shall be vegetated according to Construction Specification IA–6 unless otherwise shown on these plans.

OPERATION AND MAINTENANCE

This practice is self operating but will require the following maintenance items to ensure continued safe operation as designed:

1. Inspect the plug(s) and appurtenances at least annually and following major storm events.
2. Repair storm, rodent, or other damage as necessary to ensure the safe operation of the plug.
3. Remove accumulated debris to prevent damage to the vegetation or restriction of flow.
4. Control undesirable vegetation using appropriate methods such as mowing, cutting, burning, herbicide application, etc.
5. Control burrowing animals and repair damage as necessary.
6. Reseed and/or fertilize as necessary to maintain the desired vegetative cover.

STANDARD DWG. IA–1313

DATE Dec. 2008 | PAGE 1 OF 1

NRCS
Natural Resources Conservation Service
United States Department of Agriculture

SURFACE DRAIN PLUG DETAILS

Designed _____ Date
Drawn _____
Checked _____
Approved _____

File Name
Drawing Name
Sheet of