Iowa NRCS Standard Drawing 1411 (IA-1411)

Steel Sheet Pile Drop Structure

Specific Project Input Details:

Page one of IA-1411 will be plan sheet _____ of _____?

Page two of IA-1411 will be plan sheet _____ of _____?

Drawing Number _____?

File Number _____?

Project Name _____?

County and State _____?

Designed By _____? Date _____?

Checked By _____? Date _____?

Crest Elev. of Weir _____?

Outlet Channel Elev. _____?

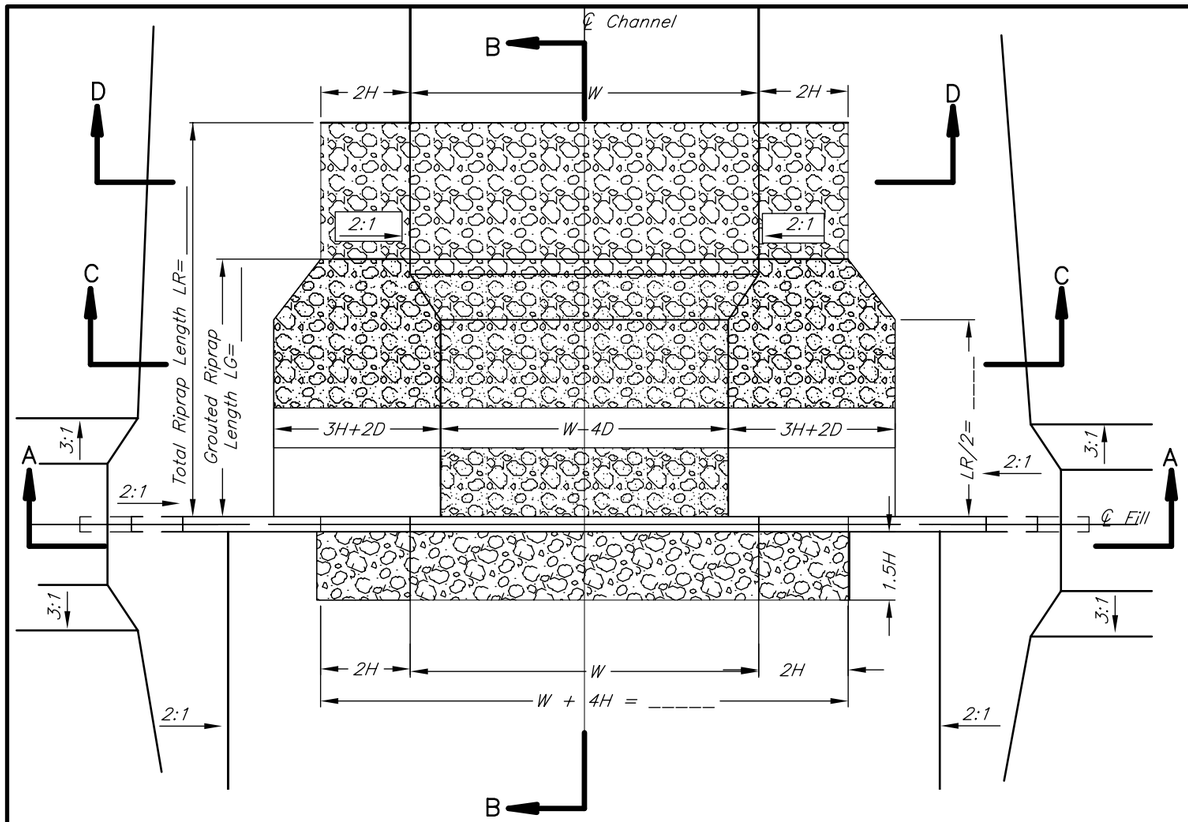

PLAN VIEW

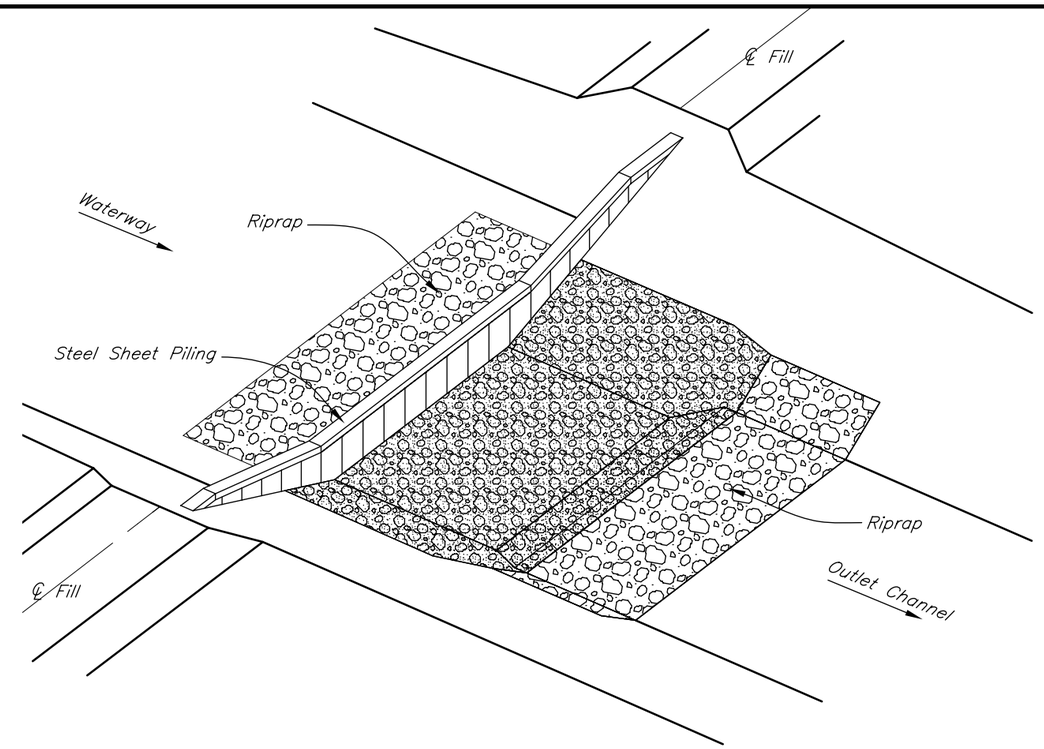

ISOMETRIC VIEW

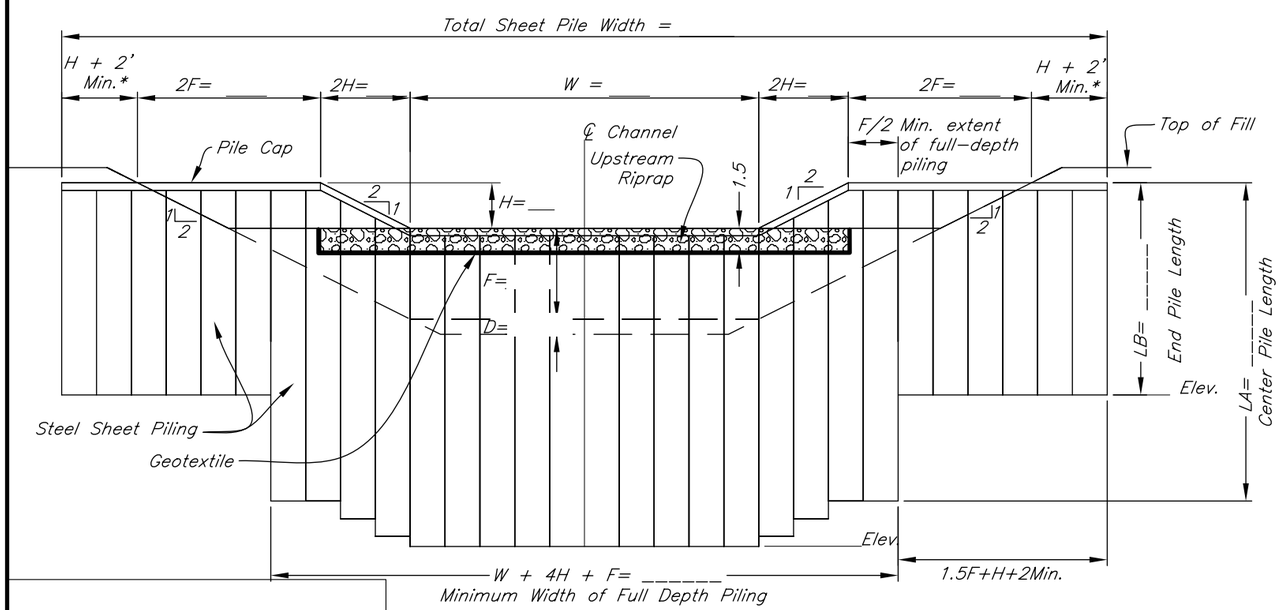

SECTION A–A

* See Site Requirements Note 5, page 2 of 2

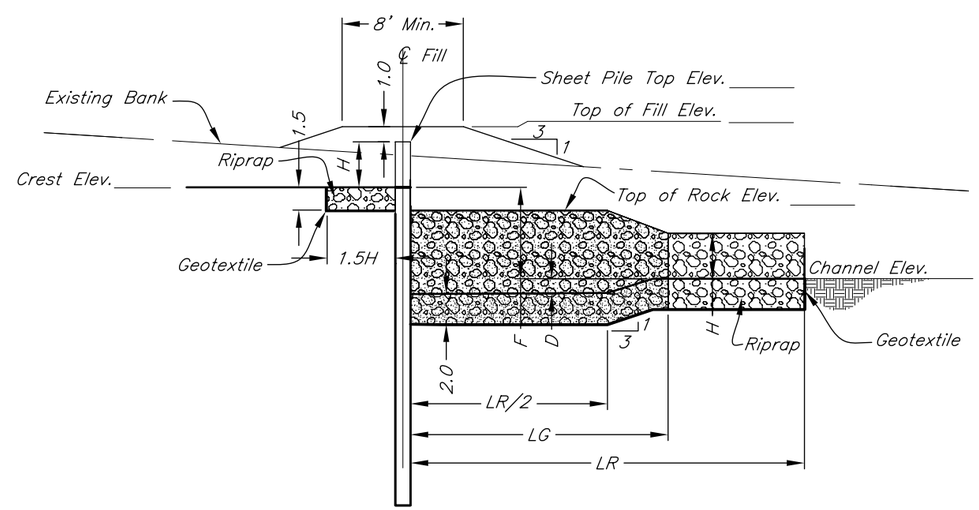

SECTION B–B

STANDARD DWG. IA–1411

DATE August 2010 | PAGE 1 OF 2

Date

Designed

Drawn

Checked

Approved

STEEL SHEET PILE DROP STRUCTURE
Till Foundation, 2 ft.–6 ft. Drop

NRCS
Natural Resources Conservation Service
United States Department of Agriculture

File No.

Drawing No.

Sheet of

SHEET PILE REQUIREMENTS -- MINIMUM VALUES						
Drop	Basin Depth	Full-Depth Pile Length	Side Pile Length	Pile Thickness	Section Modulus	Moment of Inertia
F, ft	D, ft	LA, ft	LB, ft	t, inches	S, in^3/ft	I, in^4/ft
2	0.3	7.0	5.0	0.209	0.8	0.9
3	0.5	10.0	7.0	0.209	0.8	0.9
4	0.7	14.0	9.0	0.209	2.0	3.3
5	0.8	17.0	11.0	0.250	4.4	8.1
6	1.0	22.0	14.0	0.250	8.2	20.1

STRUCTURE DIMENSIONS		
Fall = F =		ft
Weir Notch Height = H =		ft
Weir Crest, Channel Width = W =		ft
Center Sheet Pile Length = LA =		ft
Side Sheet Pile Length = LB =		ft
DS Riprap Length = LR =		ft
Grouted Riprap Length = LG =		ft
Riprap Basin Depth = D =		ft
Est. tailwater at design storm = TW =		ft

The principal spillway design flow for this structure is

The total capacity flow for this structure is

DOWNSTREAM RIPRAP AND GROUT REQUIREMENTS		
Drop	Total Riprap Length	Grouted Length
F, ft	LR, ft	LG, ft
2	10	0
3	13	0
4	18	12
5	22	15
6	26	18

QUANTITY SUMMARY		
Materials	Quantity	Units
Full depth Sheet Piles, _____ft long	0.0	Sq. Ft.
Side Sheet Piles, _____ft long	0.0	Sq. Ft.
Angle Iron for pile cap	0.0	Lin. Ft.
Riprap	0.0	Cu. Yd.
Grouted Riprap	0.0	Cu. Yd.
Geotextile	0.0	Sq. Yd.

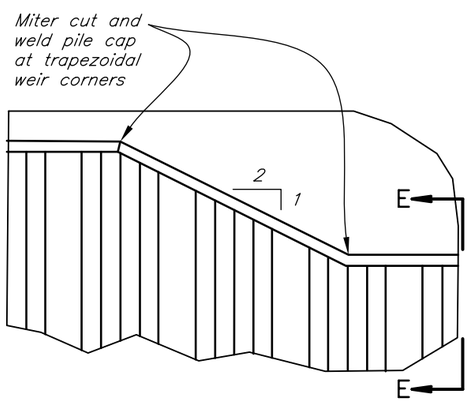

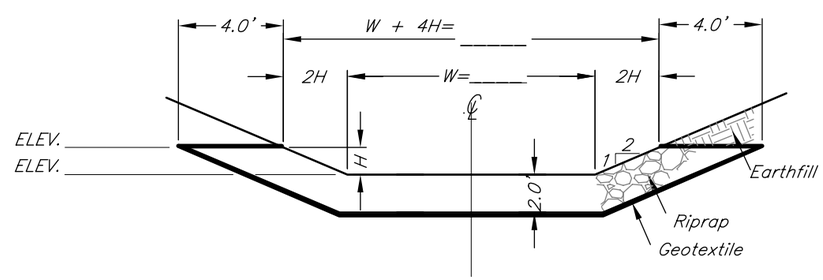

SECTION D-D

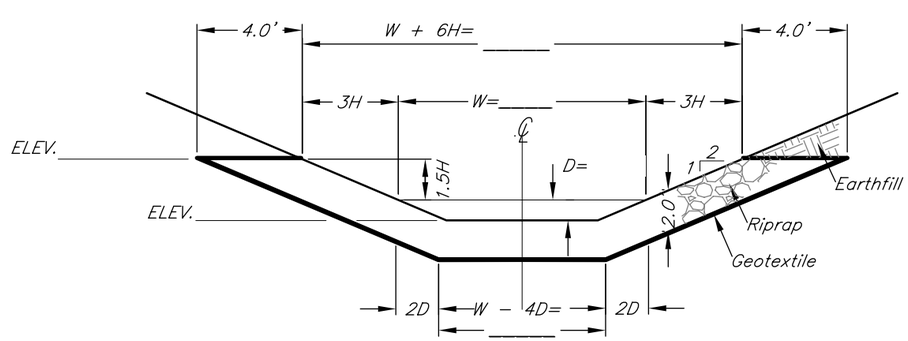

SECTION C-C

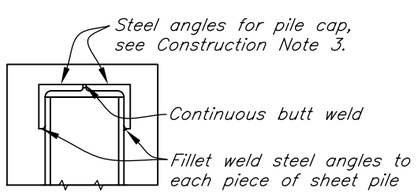

SECTION E-E

NOTES

DESIGN:

1. Maximum weir height H = 0.5F.
2. Minimum straight weir length W = 2H.
3. Maximum design flow = Q = 400 cfs
4. Minimum tailwater depth TW =1.3H at design discharge. If necessary outlet elevation shall be lowered to provide min. TW.
5. Size of weir should be evaluated based on channel morphology and flood conveyance requirements. Design weir capacity may be computed by the following formula. (assuming trapezoidal weir flow with 6" of freeboard):

   $Q=3.1\ (W+1.6h)(h)^{1.5}$
   $h = H-6"$

6. Sheet pile lengths and properties were determined using U.S. Army Corps of Engineers software, CWALSHT.
7. Riprap basin dimensions based on guidance in NEH Part 634, Sec. 11, Drop Spillways.

SITE REQUIREMENTS:

1. Channel upstream and downstream of structure shall be relatively straight and well aligned with the structure.
2. On-site soils investigation required (hand probe at minimum).
3. Depth to glacial till must be 4 ft or less below downstream channel elevation.
4. Downstream riprap shall be set at stable downstream channel grade.
5. Consider increasing horizontal embedment length of sheet pile into abutments if soils at the site are erosive (e.g. low PI, sandy, or dispersive soils).

CONSTRUCTION:

1. All riprap shall be IDOT Class D or E.
2. Top of sheet pile shall be trimmed as needed to obtain elevations indicated and to remove any damage caused by driving.
3. Shop drawings shall be provided for proposed construction of pile cap.

NOT TO SCALE

STANDARD DWG. IA-1411

DATE August 2010 | PAGE 2 OF 2

Date
Designed
Drawn
Checked
Approved

STEEL SHEET PILE DROP STRUCTURE
Till Foundation, 2 ft.-6 ft. Drop

NRCS
Natural Resources Conservation Service
United States Department of Agriculture

File No.
Drawing No.
Sheet of