Adapted from Wisconsin drawing WI–520

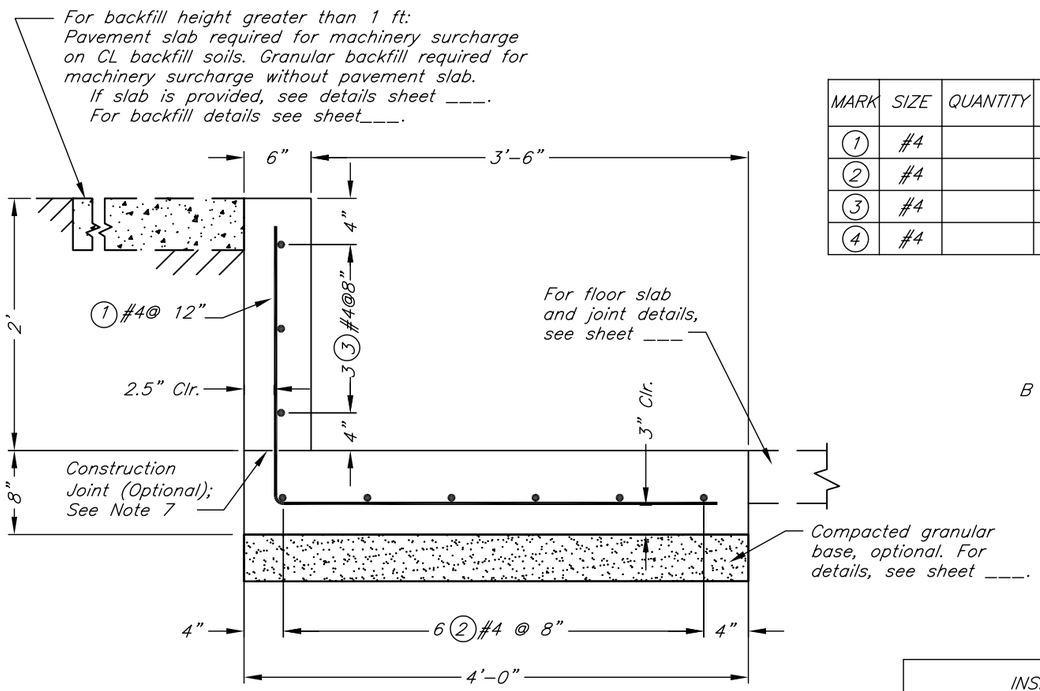

SECTION VIEW

STEEL SCHEDULE

MARK	SIZE	QUANTITY	TYPE	B	C	LENGTH	TOTAL LENGTH
①	#4		20	2'–2"	3'–7"	5'–9"	
②	#4		STR	---	---		
③	#4		STR	---	---		
④	#4		20	2'–0"	2'–0"	4'–0"	
						#4 Bars Total Length	

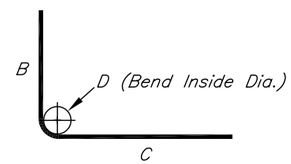

TYPE 20 BAR

STEEL DETAILS

BAR SIZE	INSIDE BEND DIAMETER (D) INCHES	LONGITUDINAL STEEL LAP SPLICE LENGTH, INCHES (MIN.) Wall bars	Footing bars
#4	3	19	16

Total length of wall (measured along ℄ wall) = _____ ft.

ESTIMATED QUANTITIES

CONCRETE (0.136 CU.YD./FT OF WALL)=_____ CU.YD.
STEEL #4 BARS (0.668 LB./FT.)=_____ LB.

Steel quantity include splice lengths? Y__ N__

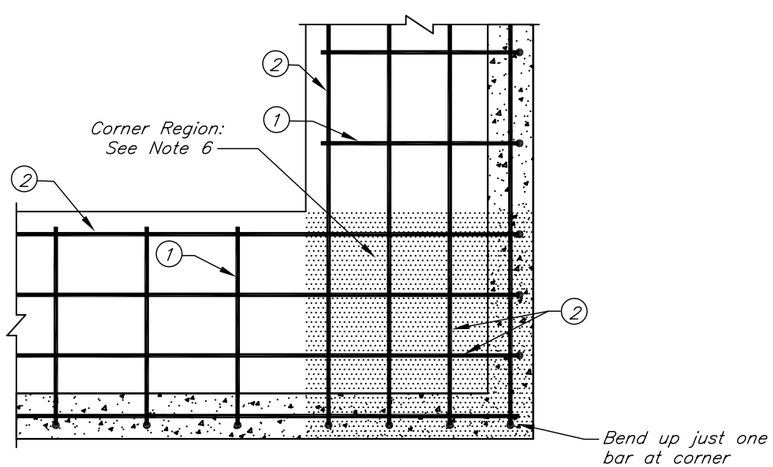

FOOTING SLAB CORNER DETAIL (PLAN VIEW)

Schematic only – not all bars shown

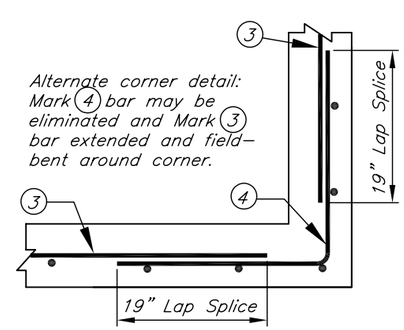

WALL CORNER DETAIL (PLAN VIEW)

NOT TO SCALE

CONDITIONS OF USE

Allowable backfill height = 0 to 2 ft
Soil backfill type, granular = gravel–sand mix, or coarse sand, with less than 50% fines; OR
Soil backfill type, CL = low to medium PI silts and clays, with 50% or more fines
Water table below footing
For granular backfill, machinery surcharge load allowed on soil or pavement slab
For CL backfill height greater than 1 ft, machinery surcharge load allowed only on pavement slab
Not designed to support buildings or roofs

MATERIALS

Concrete compressive strength = 4,000 psi
Reinforcing steel may be Grade 40 or 60.
Concrete and reinforcing steel shall meet requirements of Construction Specification IA–31.

WALL DESIGN LOADINGS

Manure load inside = 65 psf/ft EFP (Equivalent Fluid Pressure)
Soil backfill density = 110 pcf
Soil backfill load, granular = 60 psf/ft EFP
Design surcharge load for granular backfill = 120 psf horizontal pressure (modeling machinery on soil)
Soil backfill load, CL = 85 psf/ft EFP
Design surcharge load for CL backfill = 64 psf horizontal pressure (modeling machinery on concrete pavement slab)

WALL SLIDING RESTRAINT REQUIREMENTS

Assumptions:
5–inch thick floor slab, factor of safety against sliding 1.5
Coefficient of friction (soil/concrete) = 0.25 (wet, medium to dense clay foundation)

Backfill Height, ft.	Min. Floor Slab Length, ft.* Granular Backfill	CL Backfill
2	44	38
1	19	14
0	0	0

* Min. floor slab length for restraint is not required if L–wall forms a tank with opposing wall having approximately the same backfill height.

GENERAL DESIGN NOTES

1. Design loadings and soil pressures based upon criteria found in Conservation Practice Standard 313 (Waste Storage Facility).
2. Drainage shall be away from the wall.
3. Backfill to top of wall is recommended for frost protection.
4. Mark ② and ③ bars shall extend to 2 to 3 inches from edge of concrete at ends of straight wall sections.
5. Mark ① bars shall be placed a maximum of 6 inches from wall end.
6. Footing slab reinforcement at corners (see detail): extend Mark ② (longitudinal) bars into Corner Region from both sides of corner and field–bend to extend up into wall same distance as Mark ① bars. Discontinue Mark ① bars in Corner Region.
7. Construction joint, if used, shall be completed as described in Construction Specification IA–31. Surface of construction joint shall be roughened to approximately 1/4" depth. Or, slab and wall may be poured at the same time, eliminating the need for a construction joint.

STANDARD DWG. NO. IA–1665

DATE 03/08 | SHEET 1 OF 1

Designed . Date .
Drawn JGibbs 07/08
Checked . .
Approved . .

2–FT HIGH REINFORCED CONCRETE "L" WALL
0'–2' GRANULAR OR CL BACKFILL, WITH SURCHARGE
6" WALL THICKNESS

NRCS
Natural Resources Conservation Service
United States Department of Agriculture

File No. IA–1665.dwg

Drawing No. ----

Sheet of