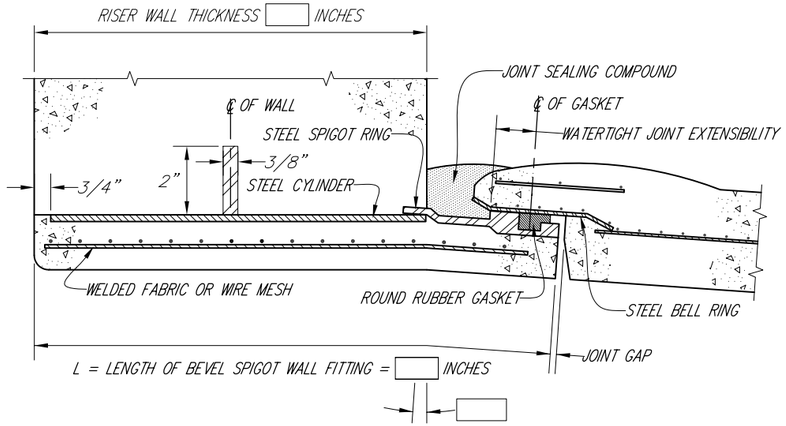

DETAIL A
BEVELED SPIGOT WALL FITTING

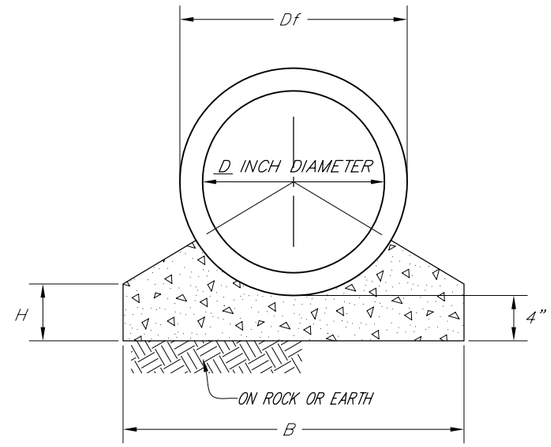

DETAIL OF BEDDING

BEDDING DIMENSIONS AND CONCRETE QUANTITY RELATIONS

INSIDE DIAMETER D INCHES	BEDDING WIDTH B FT. – IN.	BEDDING HEIGHT H INCHES	CONCRETE QUANTITIES CU. YDS. / FT. OF BEDDING
18	2 – 7	6 1/2	0.0519 – 0.0003 (Df – 24)
20	2 – 9	7	0.0569 – 0.0004 (Df – 27)
24	3 – 1	7 1/2	0.0665 – 0.0004 (Df – 32)
30	3 – 4	8	0.0734 – 0.0005 (Df – 38)
36	3 – 8	8 1/2	0.0833 – 0.0005 (Df – 44)
42	4 – 1	9 1/2	0.0975 – 0.0006 (Df – 51)
48	4 – 5	10	0.1079 – 0.0007 (Df – 58)
54	4 – 9	10 1/2	0.1187 – 0.0007 (Df – 65)
60	5 – 2	11 1/2	0.1348 – 0.0008 (Df – 72)

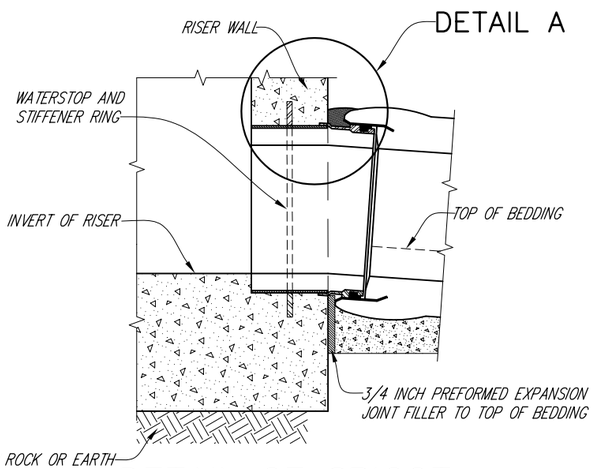

DETAIL OF SPIGOT WALL FITTING

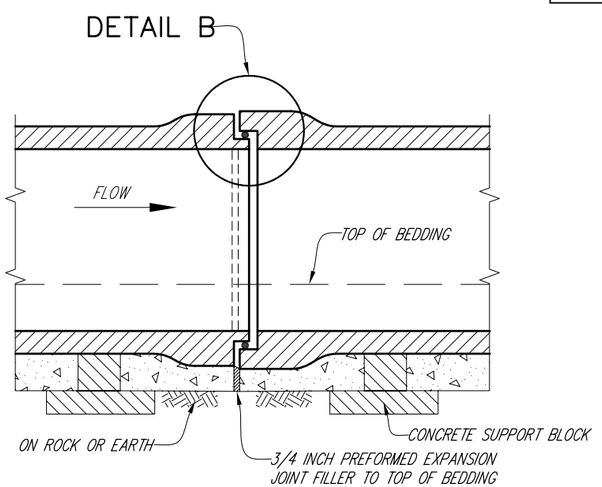

DETAIL OF PIPE JOINT

QUANTITIES

CONCRETE QUANTITY IS BASED ON OUTSIDE DIAMETER OF PIPE, Df, OF ___ INCHES.

THIS QUANTITY IS GIVEN BY
0._____ – 0.000__ (Df – ___) = _____
CU. YDS. PER LINEAL FOOT OF BEDDING.

TOTAL CONCRETE QUANTITY = ___ CU. YDS.

STRENGTH REQUIREMENTS

INSIDE DIAMETER OF PIPE	INTERNAL LOAD	EXTERNAL LOAD	
	HYDROSTATIC PRESSURE	MINIMUM 3 – EDGE BEARING STRENGTH IN POUNDS PER LINEAL FOOT OF PIPE	
		APPLICABLE STANDARD SPECIFICATION	
		AWWA C–301	AWWA C–300
	HEAD OF WATER	LOAD TO PRODUCE 0.001 IN. CRACK ONE FOOT LONG	LOAD TO PRODUCE 0.01 IN. CRACK ONE FOOT LONG
INCHES	FEET		

THE OUTSIDE DIAMETER OF PIPE ASSUMED IN DESIGN IS ___ INCHES. WHERE THE PIPE FURNISHED HAS AN OUTSIDE DIAMETER GREATER THAN ASSUMED IN DESIGN, THE THREE – EDGE BEARING STRENGTH OF THE PIPE FURNISHED MUST NOT BE LESS THAN THE SPECIFIED THREE – EDGE BEARING STRENGTH MULTIPLIED BY THE RATIO OF THE OUTSIDE DIAMETER OF THE PIPE FURNISHED TO THE OUTSIDE DIAMETER ASSUMED IN DESIGN.

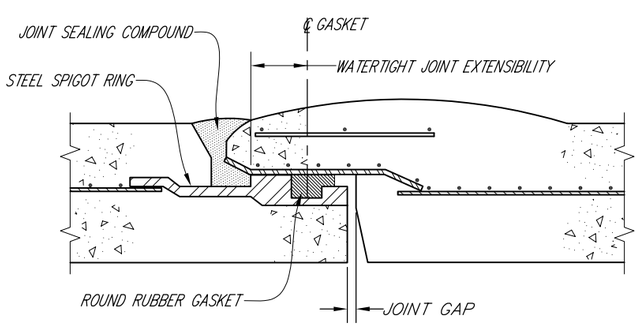

DETAIL B

JOINT REQUIREMENTS

LENGTH OF PIPE SECTION	MINIMUM JOINT LENGTH	MINIMUM JOINT LIMITING ANGLE	
FEET	INCHES	RADIANS	DEGREES

FOR PIPE LENGTH OTHER THAN SHOWN, JOINT REQUIREMENTS WILL BE DETERMINED BY THE ENGINEER.

WHERE PIPES OF DIFFERENT LENGTH ARE CONNECTED, ADJOINING PIPES SHALL MEET THE REQUIREMENTS OF THE LONGER PIPE.

PRIOR TO DELIVERY OF PIPE, THE PIPE JOINT DETAIL PROPOSED FOR USE SHALL BE SUBMITTED TO THE CONTRACTING OFFICER FOR APPROVAL.

JOINT LENGTH EQUALS WATERTIGHT JOINT EXTENSIBILITY PLUS JOINT GAP.

THE PIPE SHALL BE DRAWN TOGETHER SO THAT THE MAXIMUM JOINT GAP DOES NOT EXCEED 3/8 INCH FOR PIPE LAID ON A STRAIGHT LINE. FOR CAMBERED PIPE OR PIPE LAID ON A CURVED LINE, THE JOINT GAP AT THE CLOSEST POINT SHALL NOT EXCEED 3/8 INCH.

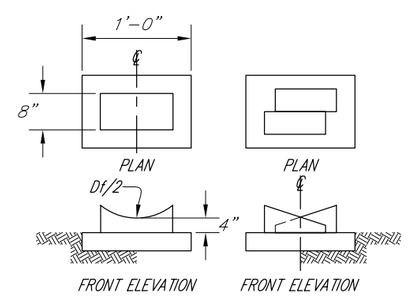

SUGGESTED SUPPORT BLOCKS AND WEDGES

SUFFICIENT BLOCKS OR WEDGES SHALL BE PROVIDED TO SUPPORT THE PIPE TO THE REQUIRED LINE AND GRADE. THE CONTRACTOR SHALL DETERMINE THE NUMBER AND SIZE OF BLOCKS OR WEDGES REQUIRED.

STANDARD CONDUIT DETAILS
FOR
REINFORCED CONCRETE PRESSURE PIPE
PRINCIPAL PIPE
STANDARD DWG. NO. ES– 61 –B
DATE 5–86 SHEET 1 OF 1

Date 12/2005
Designed STANDARD
Drawn
Checked
Approved Mark J. Jensen 12/2005

DETAILS OF PIPE BEDDING AND PIPE JOINTS

NRCS
Natural Resources Conservation Service
United States Department of Agriculture

File No. 280v.dwg
Drawing No.
Sheet of