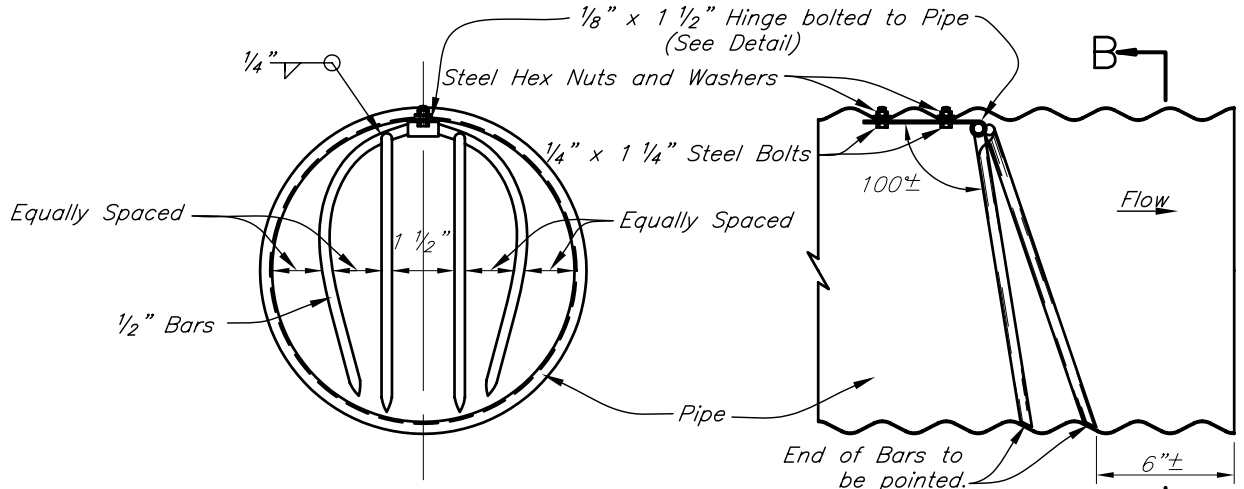

SECTION B–B

SECTION ON CENTERLINE

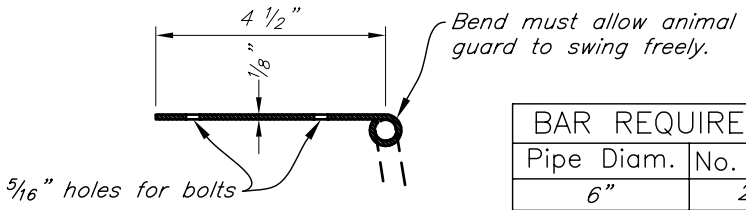

DETAIL OF HINGE

BAR REQUIREMENTS	
Pipe Diam.	No. of Bars
6"	2 Bars
8" – 12"	4 Bars
14" – 18"	6 Bars
20"	8 Bars*

* Use two hinges.

Note:
At contractor's option, a commercial animal guard acceptable to the Engineer may be installed in lieu of the animal guard shown.

STANDARD DWG. IA–1200

DATE July 2008 | SHEET 1 OF 1

NRCS
Natural Resources Conservation Service
United States Department of Agriculture

DETAILS OF ANIMAL GUARD
FORK TYPE

Designed _____ Date
Drawn _____
Checked _____
Approved _____

File Name
Drawing Name
Sheet of