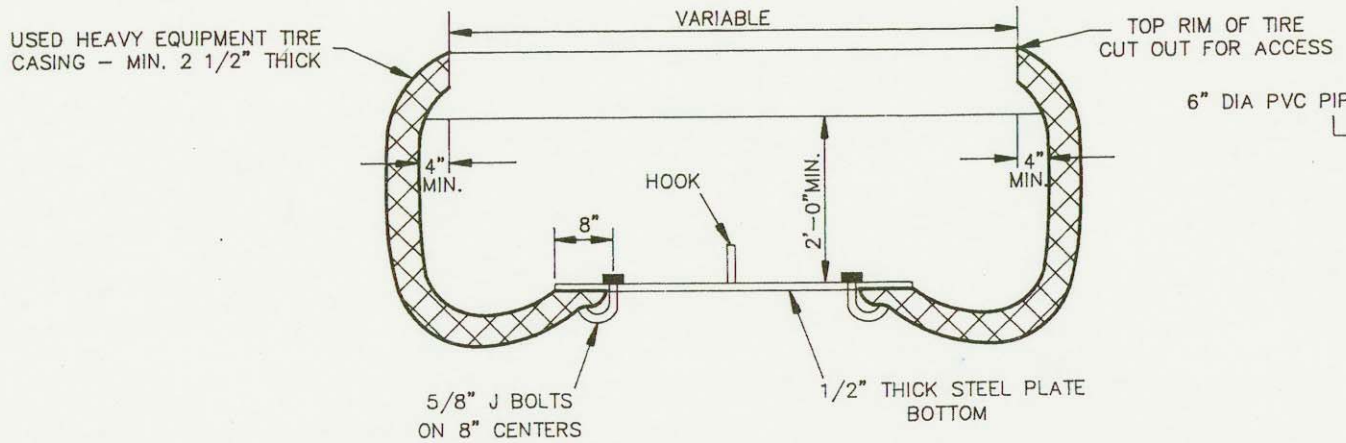

SECTIONAL ELEVATION

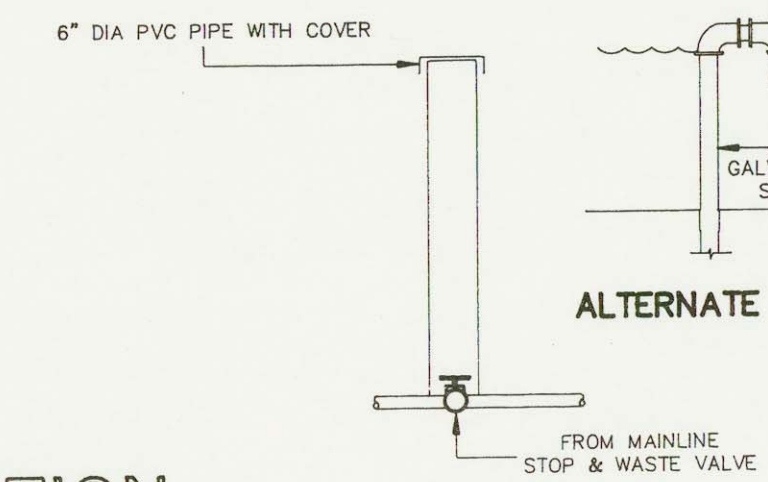

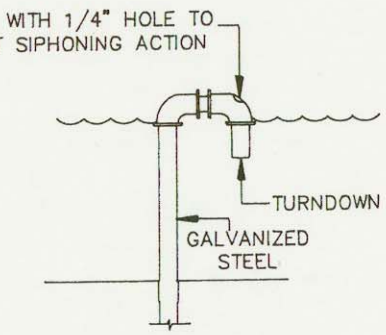

ALTERNATE INLET

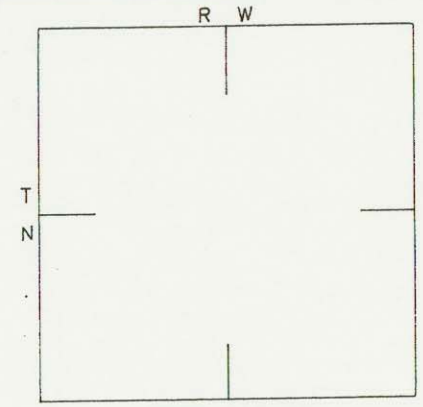

LOCATION

TANK CAPACITY

MINIMUM _____ gal.

NOTES:

1. USED TIRE CASING SHALL BE FREE OF CUTS, RIPS AND HOLES. TREAD WEAR SHALL NOT BE WORN BEYOND TREAD DEPTH. MINIMUM CASING THICKNESS 2 1/2 INCHES.
2. SUPPLY LINE TO TANK IS NOT SHOWN. LOCATION WILL DEPEND UPON SITE CONDITIONS.
3. MINIMUM OF 5/8" DIA. "J" BOLTS WILL BE USED TO ATTACH 1/2" STEEL PLATE.
4. USE A SEAL COATING OF BLACK ASPHALT FOR STEEL PLATE–AT AREA OF ATTACHMENT IN ADDITION TO COVERING THE INSIDE AND OUTSIDE OF PLATE IN TANK–USE "ELASTOSEAL KOTE" OR EQUIVALENT MATERIAL.

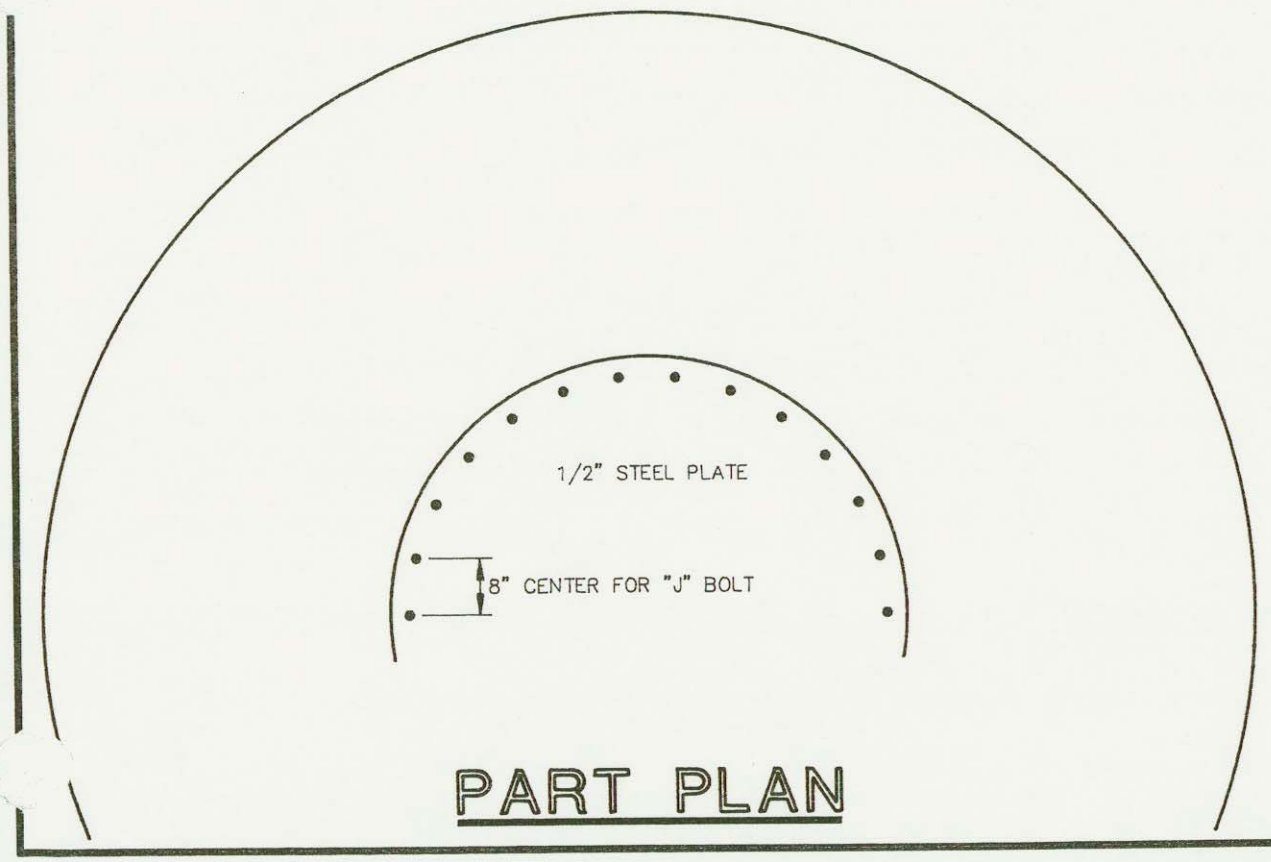

PART PLAN

JOB PLAN NO.14.5B

USED HEAVY EQUIPMENT TIRE CASING STOCKWATER TANK WITH STEEL BOTTOM PLATE

OPERATOR _____

CONSERVATION DISTRICT _____

U.S. DEPARTMENT OF AGRICULTURE
SOIL CONSERVATION SERVICE

	DATE		
DESIGNED		APPROVED BY	
DRAWN		TITLE	
TRACED		TITLE	
CHECKED		SHEET NO OF	DRAWING NO.