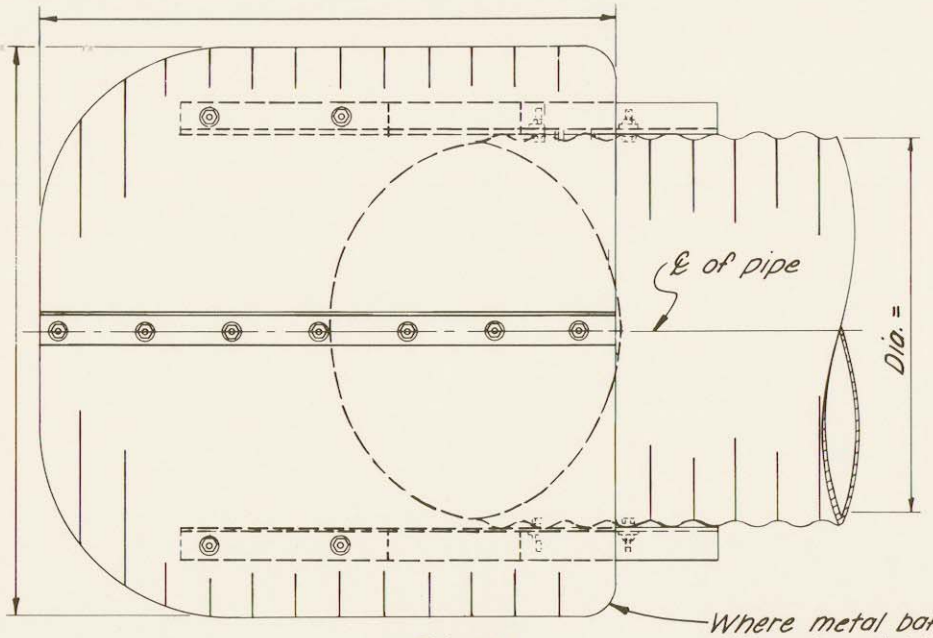

PLAN

Where metal baffle is fabricated of more than one piece of metal, the separate pieces shall be securely fastened to each other. Sharp corners shall be removed. At contractors option, metal baffle may be shaped circular, square or as shown

DIMENSIONS

PIPE DIA. INCHES	THICKNESS IN INCHES OF BAFFLE	ANGLE BRACE DIMENSIONS, INCHES					BOLT SIZE INCHES	HOLE SIZE INCHES	ANGLE IRON SIZE INCHES	WEIGHT OF ANGLE IRON LB.
		a	b	c	d	e				

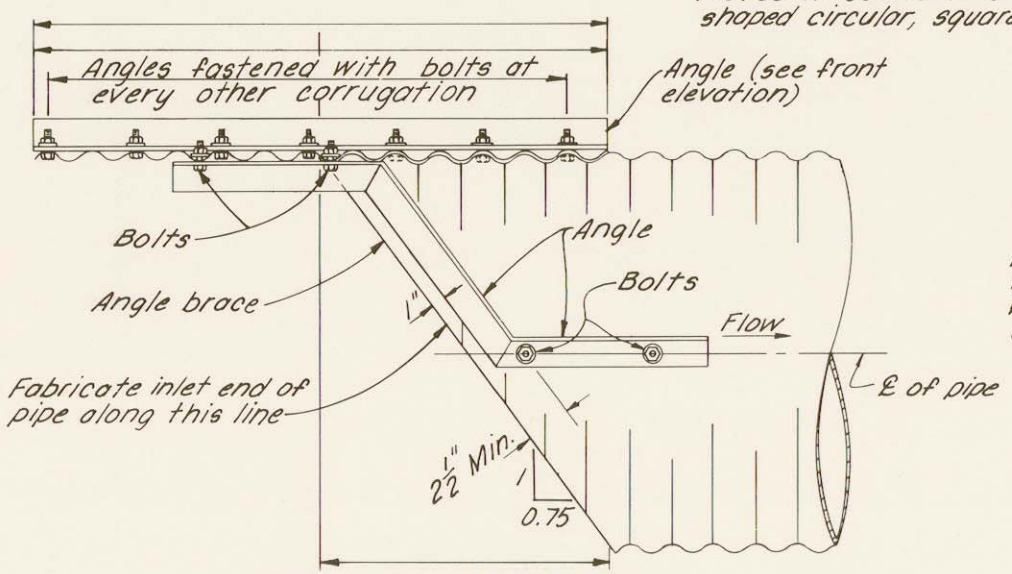

SIDE ELEVATION

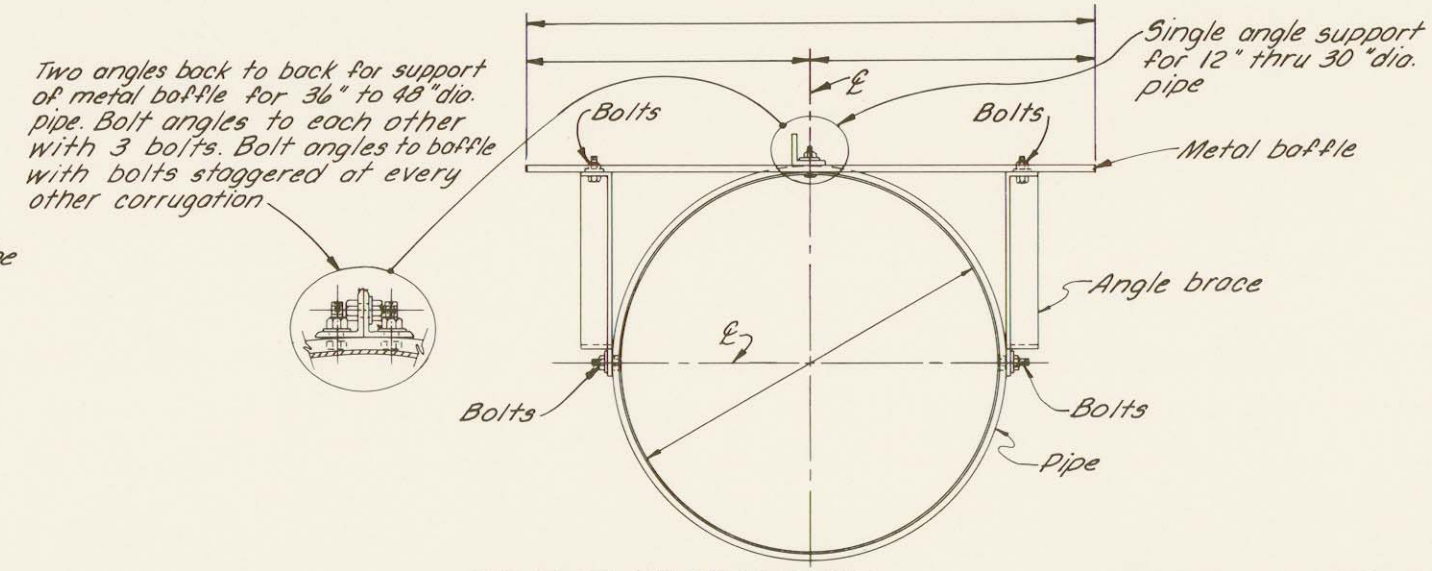

FRONT ELEVATION

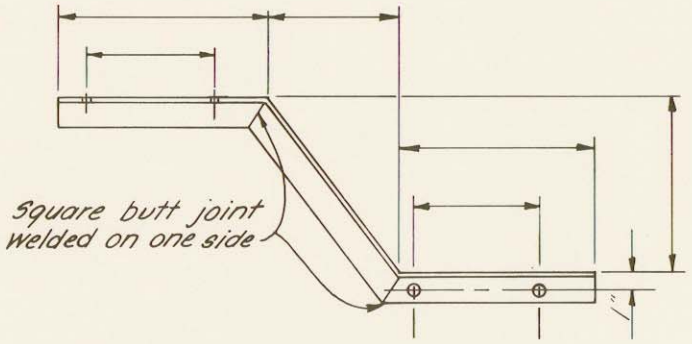

ANGLE BRACE DETAIL
(1 left and 1 right required)

NOTES:

1. ALL BOLTS SHALL HAVE NUT AND SPLIT WASHERS.
2. ALL NUTS, BOLTS, AND WASHERS SHALL BE GALVANIZED, CADMIUM PLATED, OR STAINLESS STEEL.
3. ALL CUTS SHALL BE SAW OR SHEAR CUTS.
4. HOLES IN THE ANGLE BRACE SHALL BE SPACED AND LOCATED TO MATCH CORRUGATIONS IN PIPE AND BAFFLE.
5. ALL GALVANIZING DAMAGED BY CUTTING, DRILLING OR WELDING SHALL BE REPAIRED BY PAINTING WITH TWO COATS OF ZINC DUST-ZINC OXIDE PRIMER.

HOODED INLET AND BAFFLE

OPERATOR: _____

CONSERVATION DISTRICT: _____

U. S. DEPARTMENT OF AGRICULTURE
SOIL CONSERVATION SERVICE

	Date		
Designed		Approved by	
		Title	
Drawn		Title	
Traced		Sheet No	Drawing No
Checked		of	

REFERENCE: GUIDE PLAN NO. 6.1

JOB PLAN NO. 6.1

5,N-29,073.6-1a