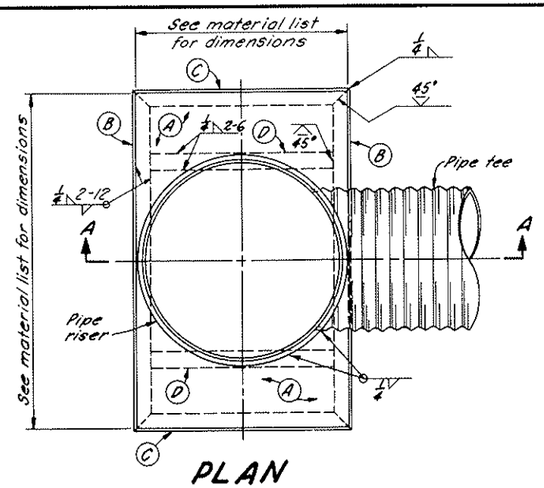

PLAN

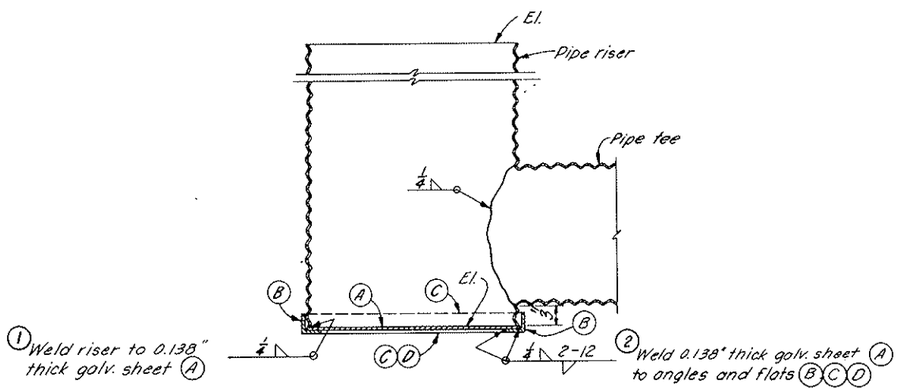

SECTIONAL ELEVATION A-A
TYPE A

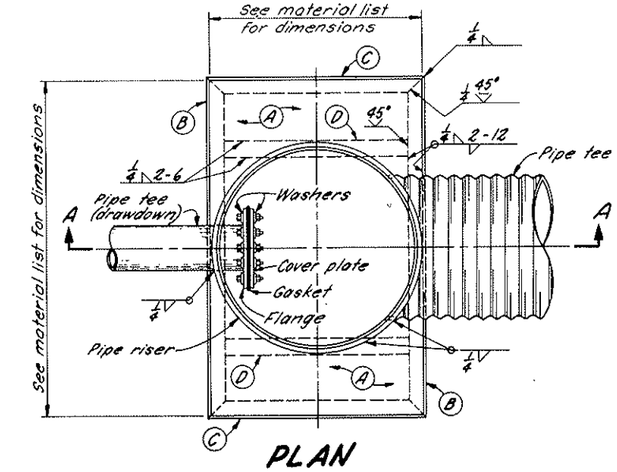

PLAN

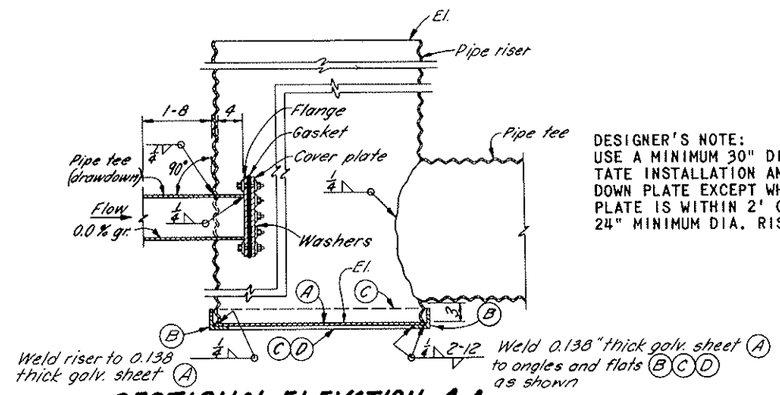

DESIGNER'S NOTE:
USE A MINIMUM 30" DIA. RISER TO FACILITATE INSTALLATION AND REMOVAL OF DRAWDOWN PLATE EXCEPT WHEN THE DRAWDOWN PLATE IS WITHIN 2' OF RISER CREST, A 24" MINIMUM DIA. RISER MAY BE USED.

SECTIONAL ELEVATION A-A
TYPE B

MATERIAL LIST AND TABLE OF QUANTITIES FOR RISER BASE

	MARK	ITEM	12" DIA. RISER	15" DIA. RISER	18" DIA. RISER	21" DIA. RISER	24" DIA. RISER	30" DIA. RISER	UNIT	QUANTITY
MATERIAL LIST	A	0.138" THICK GALV. METAL SHEET	13" X 36"	16" X 39"	19" X 42"	22" X 54"	25" X 72"	31" X 78"	EACH	1
	B	ANGLES 3" X 3" X 1/4"	3'-1"	3'-4"	3'-7"	4'-7"	6'-1"	6'-7"	EACH	2
	C	ANGLES 3" X 3" X 1/4"	1'-2"	1'-5"	1'-8"	1'-11"	2'-2"	2'-8"	EACH	2
	D	FLAT BAR, 3" X 1/4"	0'-8"	0'-11"	1'-2"	1'-5"	1'-8"	2'-2"	EACH	2
TABLE OF QUANTITIES	0.138" THICK GALV. METAL SHEET WT. (LB.)		18.8	25.0	32.0	39.7	48.2	67.2		
	STRUCTURAL STEEL WT. (LB.)		45.0	51.2	57.4	70.9	89.4	101.7		
	TOTAL WT. OF STEEL BASE (LB.)		63.8	76.2	89.4	108.8	137.6	168.9		

NOTES:
1. ALL ANGLES AND SHEETS TO BE SECURELY WELDED AS SHOWN ON THE PLANS IN ACCORDANCE WITH SPECIFICATIONS.
2. ALL WELDS AND HEAT AFFECTED AREAS ON GALVANIZED METAL TO BE TREATED IN ACCORDANCE WITH SPECIFICATIONS.
3. CROSS OUT PLAN NOT APPLICABLE ON JOB PLAN.

METAL BASE PIPE RISER

SOUTH DAKOTA GUIDE PLAN NO.5.0

U. S. DEPARTMENT OF AGRICULTURE
SOIL CONSERVATION SERVICE

Designed D.H., D.T. Date 6-70
Drawn
Traced
Checked
Approved by
Title
Title
Sheet No. 1 of 1
Drawing No.

5, N-29,073.5