Instructions for Combined South Dakota Job Plans 14.5C, 12B, 14.5

Used Heavy Equipment Tire Casing Stockwater Tank,
Concrete Apron for Stockwater Tank,
Stockwater Pipeline Appurtenances,
and
Combined Appputenances and Tire Tank Drawing

Fill in the data fields on this page to automatically fill in the title block on the drawing. You will also need to complete the fields on the drawing.

Clear Form

Producer	
¼ Section	
Section	
Township	
Range	
County	
Conservation District	

Who / When	Who (initials)	When (MM/DD/YY)
Designed		
Drawn		
Checked		
Approved		

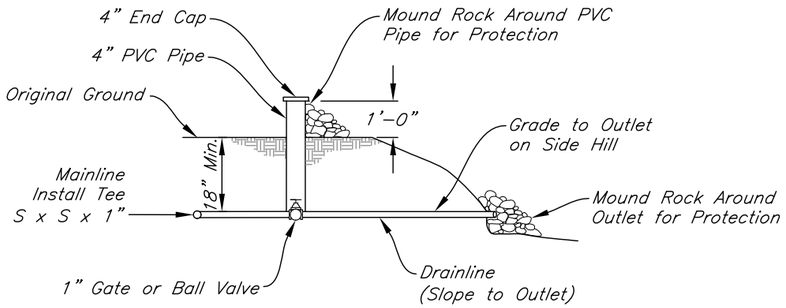

TYPICAL DRAIN INSTALLATION FOR SHALLOW BURY PIPELINES

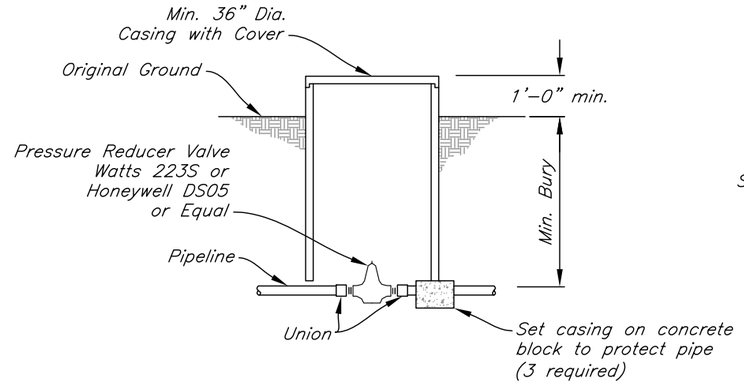

TYPICAL PRESSURE REDUCER INSTALLATION

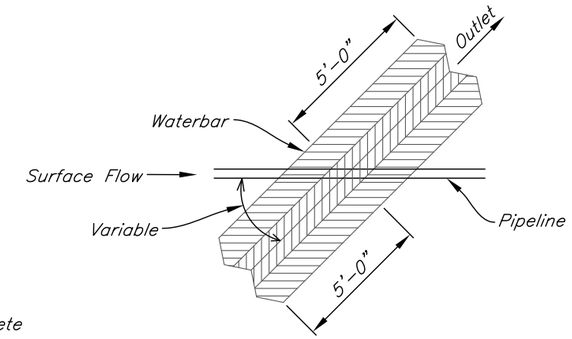

PLAN VIEW

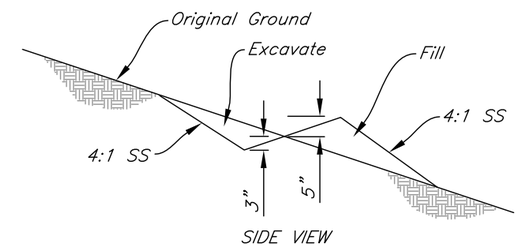

SIDE VIEW

TYPICAL WATERBAR INSTALLATION

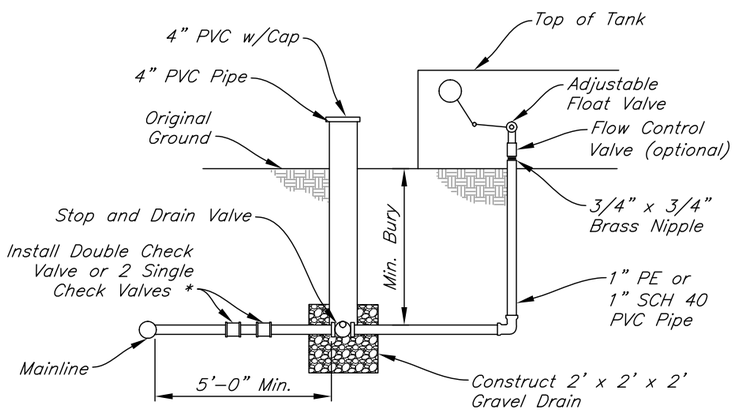

TYPICAL STOP AND DRAIN INSTALLATION

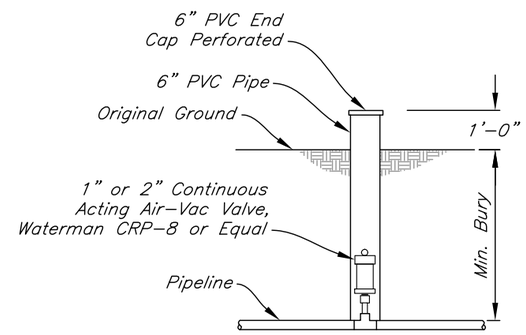

TYPICAL AIR-VAC VALVE INSTALLATION
(IN RISER)

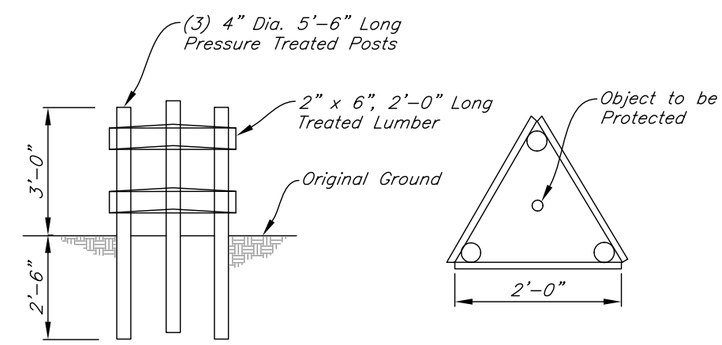

TYPICAL GUARD POST INSTALLATION
(Use to Protect Above Ground Appurtenances from Livestock)

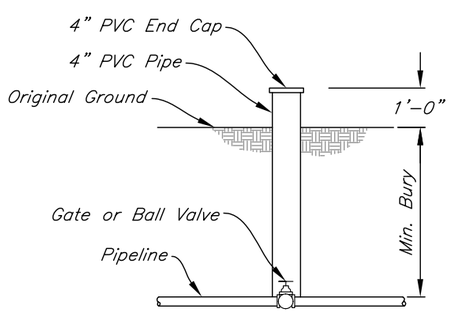

TYPICAL GATE OR BALL VALVE INSTALLATION
(IN RISER)

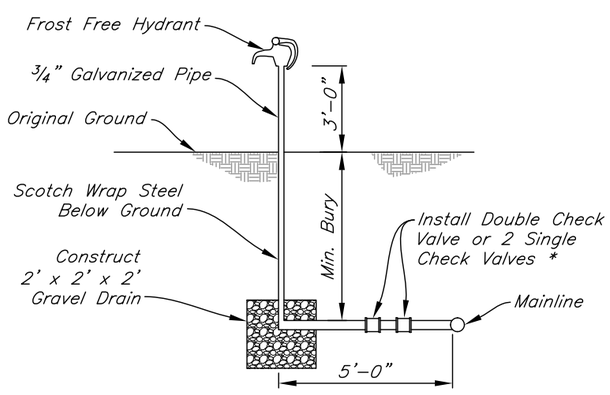

TYPICAL HYDRANT INSTALLATION

MATERIAL LIST	
ITEM	QUANTITY
4" dia. 5'-6" Long Pressure Treated Posts	3
2" x 6" x 2'-0" Pressure Treated Lumber	6
3/8" Dia. 4" Long Lag Screws or #16 Ring Shank Nails	24

* Required if Mainline Serves Household or Other Potable Use.

STOCKWATER PIPELINE APPURTENANCES
JOB PLAN 12B 05/2012

TANK SELECTION		
DATE	APPROVED	TITLE
01/24/05	Steven A. Quissell	AE-FSO
04/04/05	Jay B. Cobb	SCE-SD
05/07/12	Jay B. Cobb	SCE-SD

Date
Designed
Drawn
Checked
Approved

NAME: STOCKWATER PIPELINE
Stockwater Pipeline Appurtances
Sec. ____, T. ____, R. ____ County, South Dakota

NRCS
Natural Resources Conservation Service
United States Department of Agriculture

File No. Tanks_2012.dwg
Drawing No. ----
5/7/12 11:18 AM
Sheet of

TANK SELECTION GUIDE *

Tank Dia.	Gallons	Tank Dia.	Gallons	Tank Dia.	Gallons
6.0 Ft.	353	9.0 Ft.	794	12.0 Ft.	1,412
6.5 Ft.	414	9.5 Ft.	885	12.5 Ft.	1,532
7.0 Ft.	480	10.0 Ft.	981	13.0 Ft.	1,657
7.5 Ft.	552	10.5 Ft.	1,081	13.5 Ft.	1,787
8.0 Ft.	628	11.0 Ft.	1,187	14.0 Ft.	1,922
8.5 Ft.	708	11.5 Ft.	1,297		

* (Based on 20 Inches of Depth)

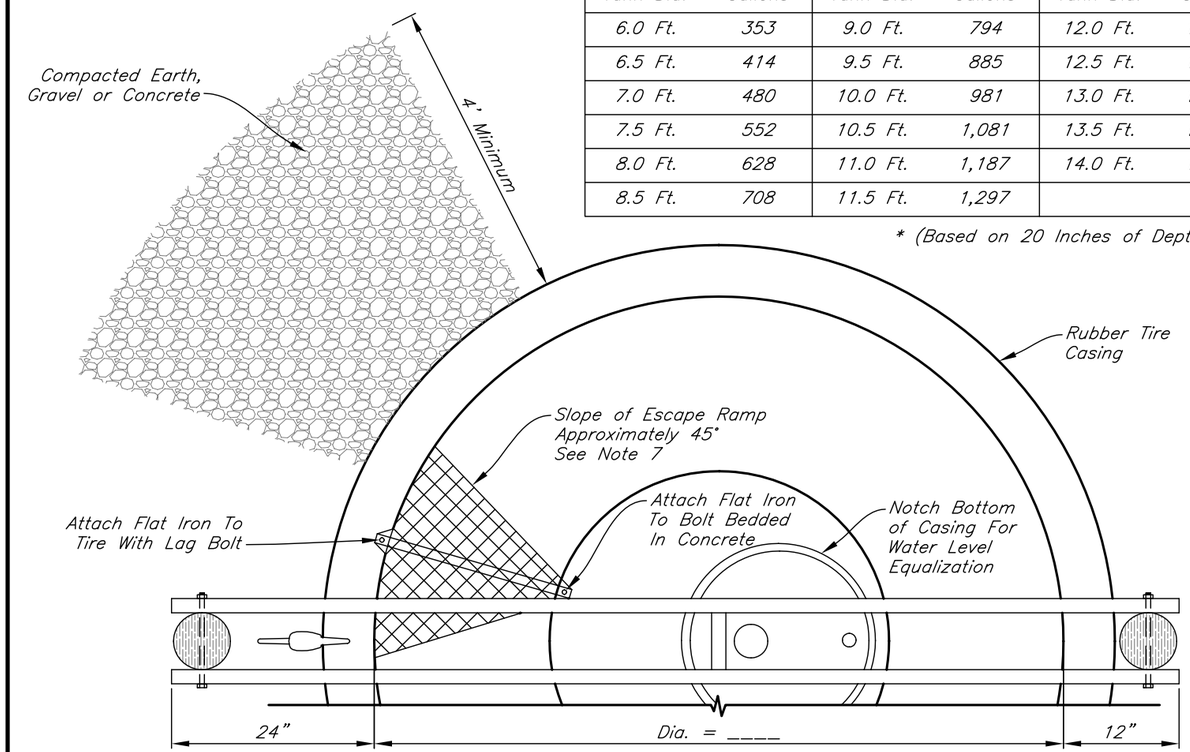

PLAN VIEW

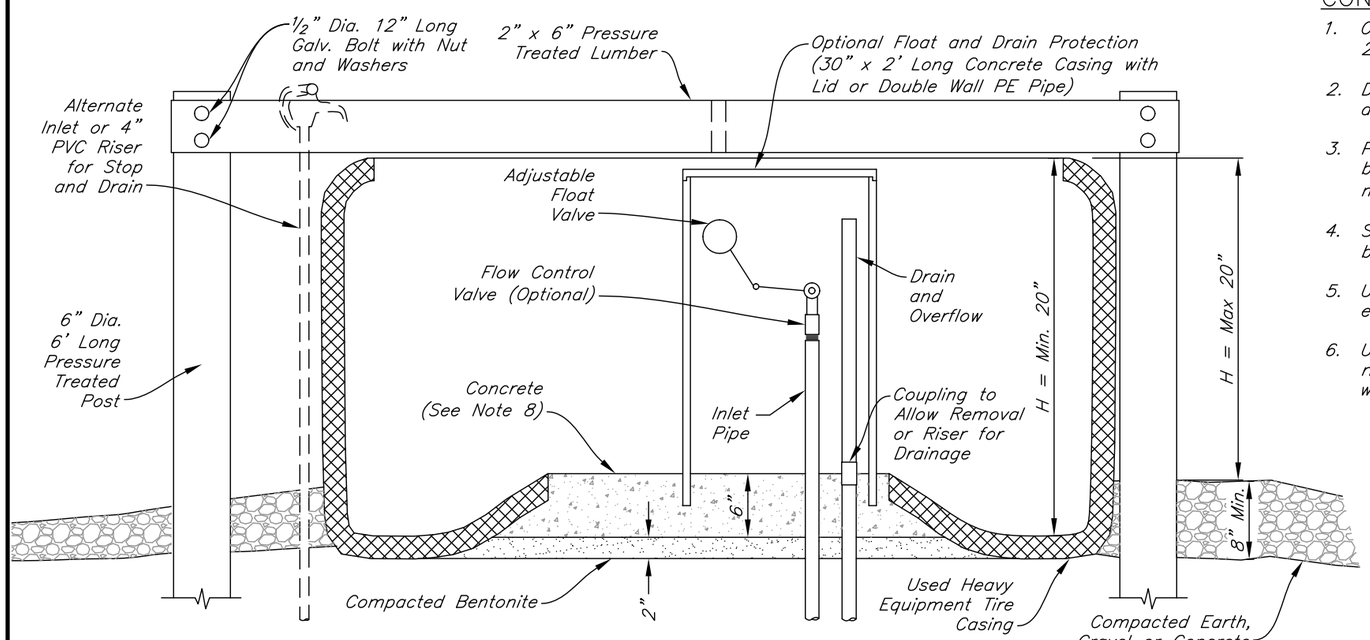

SIDE VIEW

TABLE OF QUANTITIES

Item	Unit	Quantity Per Tank (A)	Number of Tanks Planned (B)	Total Quantity For Project (A*B)	As–Built
Used Rubber Tire Casing	Each				
Concrete (Sackcrete)	Bags				
Bentonite	Bags				
2" x 6" Treated Lumber	Each				
6" Dia. 6'–0" Long Treated Posts	Each				
30" x 2' Concrete Casing with Lid	Each				
Frost Free Hydrant	Each				
Stop and Drain	Each				
PVC Drain	Feet				
Animal Escape Ramp	Each				

Volumes to Seal Tire Center		
Tank Dia.	Sackcrete (80 lb. Bags)	Bentonite (50 lb. Bags)
8 Ft.	16 Bags	5 Bags
10 Ft.	20 Bags	6 Bags
12 Ft.	24 Bags	7 Bags

TANK SELECTION		
	Tank Dia.	Gallons
Planned		
"As–Built"		

"As–Built" – Verify that the tank is 20 or more inches deep, measure the inside tank diameter, round to the nearest ½ foot and select the gallons from Tank Selection Guide.

CONSTRUCTION NOTES

1. Overflow and drain pipe shall be minimum 2" diameter.
2. Drain pipe shall be graded to allow drainage of the tank.
3. Protect drain pipe at outlet end by backfilling over pipe with field stone, minimum 1 ½" diameter.
4. Set bottom of tank approximately 8" below existing ground level.
5. Use pre–mixed bags of sackcrete or equal for concrete.
6. Used tire casing shall be free of cuts, rips, and holes. Tire casing must not be worn beyond tread depth.
7. An animal escape ramp is required in the tank, which will provide a positive means of escape for any bird or animal. See Job Plan 13.1 for details.
8. Alternative methods to seal bottom with concrete and bentonite include: ½" thick steel plate, 1" thick rubber (conveyor belt material), or 3/16" thick fiberglass secured to tire bead with lag bolts and caulked with a silicone sealant to insure a good water tight seal.
9. A 4" PVC riser with cap shall be used for a stop and drain.
10. Hydrant or float and overflow must be protected by one of the shown protection systems or an approved alternative.

STATEMENT OF COMPLIANCE

Construction (was) (was not) completed in accordance with approved construction plans and specifications.

_____
JAA Date

USED HEAVY EQUIPMENT TIRE CASING STOCKWATER TANK WITH BENTONITE AND CONCRETE BOTTOM

JOB PLAN 14.5C REV. 05/2012

TANK SELECTION		
DATE	APPROVED	TITLE
09/07/2005	Jay B. Cobb	SCE–SD
04/01/2008	Jay B. Cobb	SCE–SD
05/07/2012	Jay B. Cobb	SCE–SD

Date
Designed
Drawn
Checked
Approved

NAME: WATERING FACILITY
USED HEAVY EQUIPMENT TIRE CASING STOCKWATER TANK
Sec. ____, T. ____, R. ____ County, South Dakota

NRCS
Natural Resources Conservation Service
United States Department of Agriculture

File No. Tanks_2012.dwg
Drawing No. ----
5/7/12 11:32 AM
Sheet of

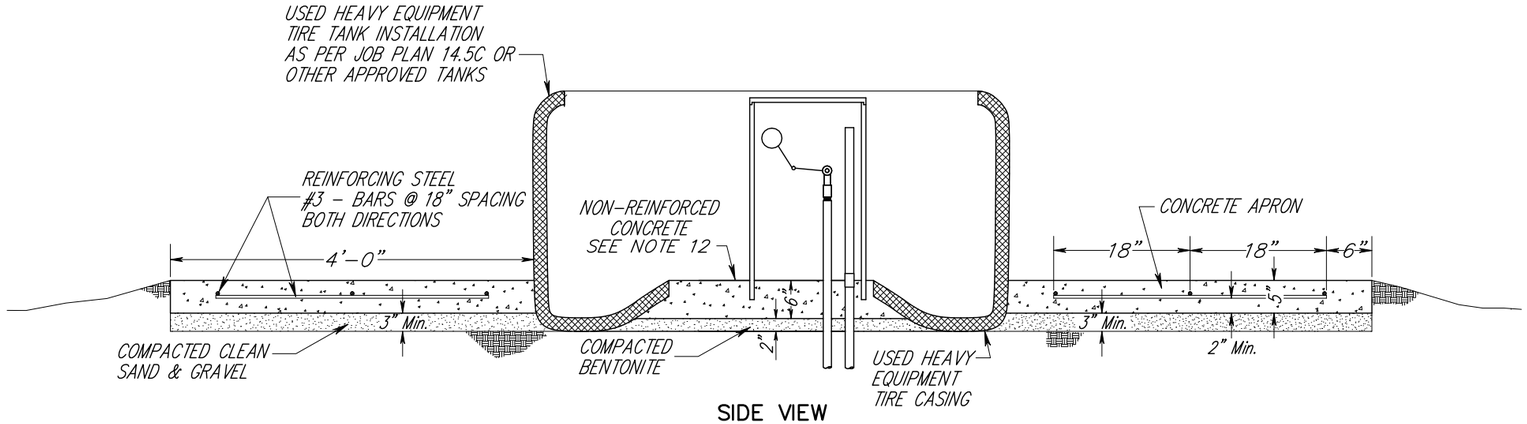

SIDE VIEW
(NOT DRAWN TO SCALE)

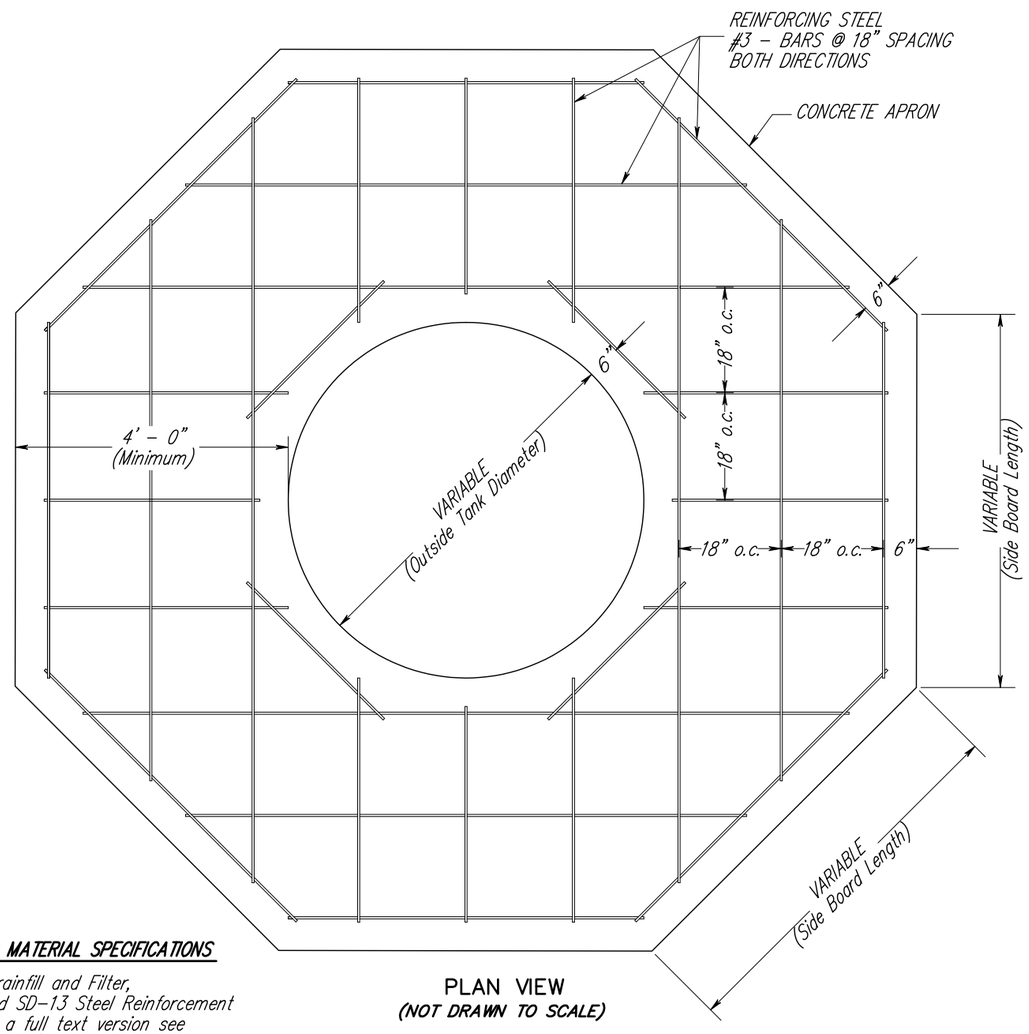

PLAN VIEW
(NOT DRAWN TO SCALE)

QUANTITIES DATA SUMMARY

TANK OUTSIDE DIAMETER (ft.)	CONCRETE (cu. yd.)	REINFORCING STEEL * (lbs.)	CLEAN SAND / GRAVEL (cu. yd.)	SIDE BOARD LENGTH (ft–inches)
6	2.1	74.0	1.3	5'–10"
7	2.3	80.0	1.4	6'–3"
8	2.5	84.9	1.5	6'–7 1/2"
9	2.8	95.0	1.7	7'–1 1/2"
10	3.0	105.0	1.8	7'–5 1/2"
11	3.2	109.0	1.9	7'–10 1/2"
12	3.4	115.9	2.1	8'–3 1/2"
13	3.6	123.7	2.2	8'–8 1/2"

* REINFORCING STEEL QUANTITIES WILL VARY SLIGHTLY DEPENDING ON ACTUAL SPACING

TANK SELECTION

OUTSIDE TANK DIA. -- _____ FT.

TABLE OF QUANTITIES

ITEM NO.	ITEM	UNIT	QUANTITY	"AS BUILT"
1	CONCRETE (CLASS 3500)	cu.yd.		
2	REINFORCING STEEL	lbs.		
3	CLEAN SAND / GRAVEL	cu.yd.		

CONSTRUCTION NOTES:

1.) THE CONCRETE APRON WILL BE CONSTRUCTED USING TYPE II OR IIA PORTLAND CEMENT.
2.) THE CONCRETE MIX WILL ACHEIVE A MINIMUM COMPRESSIVE STRENGTH OF 3500 POUNDS PER SQUARE INCH AT 28 DAYS.
3.) THE CONCRETE MIX MUST CONTAIN LESS THAN SIX GALLONS OF WATER PER (94 POUND) BAG OF CEMENT.
4.) AIR ENTRAINMENT SHALL BE BETWEEN FOUR AND SEVEN PERCENT BY VOLUME.
5.) CONCRETE SLUMP AT THE TIME OF PLACEMENT MUST BE BETWEEN TWO AND FIVE INCHES.
6.) THE CONCRETE APRON WILL BE A MINIMUM OF 5" THICK WITH THE REINFORCING STEEL PLACED IN THE CENTER OF THIS DEPTH.
7.) THE CONCRETE APRON SHALL BE CONSTRUCTED ON A FIRM, LEVEL, CLEAN, COMPACTED SAND AND GRAVEL FOUNDATION A MINIMUM OF THREE INCHES THICK.
8.) THE MINIMUM REQUIRED REINFORCING STEEL IS #3 BARS (3/8" dia.) PLACED AT 18 INCHES SPACING AS SHOWN. ALL STEEL SHALL BE GRADE 40, 50, OR 60.
9.) REINFORCING STEEL SHALL BE PLACED WITH A 6" CLEAR DISTANCE FROM THE TIRE TANK AND ALL FORMWORK.
10.) THE PLAN VIEW DRAWING SHOWS TYPICAL STEEL PLACEMENT. ACTUAL SPACING OF THE REINFORCING STEEL WILL VARY DUE TO THE DIAMETER OF THE TANK. IN NO CASE MAY THE REINFORCING STEEL SPACING EXCEED 18" c–c OR THE DISTANCE FROM THE REINFORCING STEEL TO THE EDGE OF THE CONCRETE EXCEED 6".
11.) ANY NECESSARY REINFORCING STEEL SPLICES SHALL HAVE A MINIMUM OVERLAP OF 16".
12.) THE APPROXIMATE QUANTITIES PROVIDED IN THE ABOVE TABLE DO NOT INCLUDE THE QUANTITIES OF MATERIALS FOR THE TIRE TANK INSTALLATION ITSELF. THESE QUANTITIES SHOULD BE OBTAINED FROM THE APPROPRIATE JOB PLAN FOR THE TANK.
13.) FOLLOWING CONSTRUCTION, THE SURROUNDING EARTH SHALL BE SHAPED TO DRAIN AWAY FROM THE CONCRETE APRON.

"STATEMENT OF COMPLIANCE"
Construction (was) (was not) completed in accordance with approved construction plans and specifications.

JAA Date

SOUTH DAKOTA CONSTRUCTION AND MATERIAL SPECIFICATIONS

Construction Specification SD–9 Drainfill and Filter, SD–12A Concrete (Class 3500) and SD–13 Steel Reinforcement are incorporated by reference. For a full text version see http://www.sd.nrcs.usda.gov/technical/SD_Engineering.html

CONCRETE APRON FOR STOCKWATER TANK

JOB PLAN 14.5 04/2008

REVISIONS		
DATE	APPROVED	TITLE
09/22/05	Jay B. Cobb	SCE–SD
04/01/08	Jay B. Cobb	SCE–SD

Date
Designed
Drawn
Checked
Approved

PRODUCER
SECTION ___ T. ___ R. ___
COUNTY
CONSERVATION DISTRICT

USDA – NRCS
State Office Engineering Staff
200 Fourth Street SW
Huron, South Dakota 57350

NRCS
Natural Resources Conservation Service
United States Department of Agriculture

File Name: ConcApron14.5_010408.pro

Drawing No.

3/21/2008 2:50PM

Sheet of

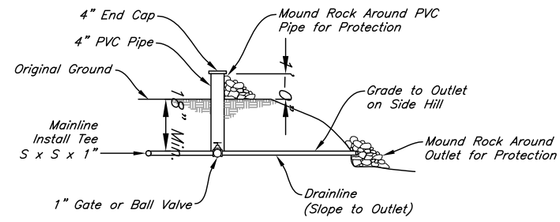

TYPICAL DRAIN INSTALLATION FOR SHALLOW BURY PIPELINES

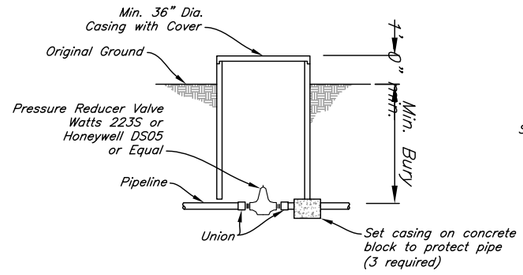

TYPICAL PRESSURE REDUCER INSTALLATION

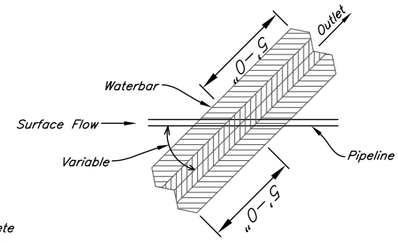

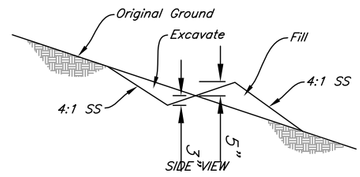

TYPICAL WATERBAR INSTALLATION

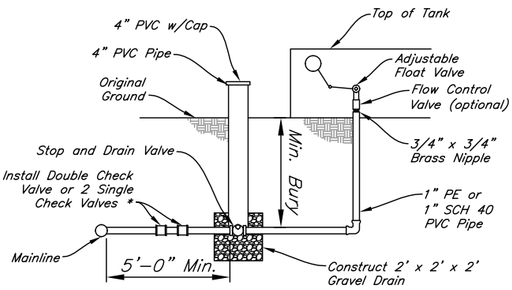

TYPICAL STOP AND DRAIN INSTALLATION

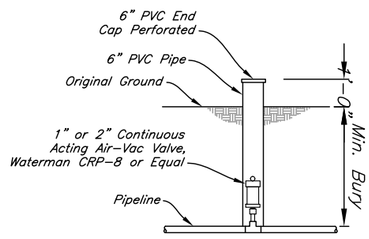

TYPICAL AIR-VAC VALVE INSTALLATION
(IN RISER)

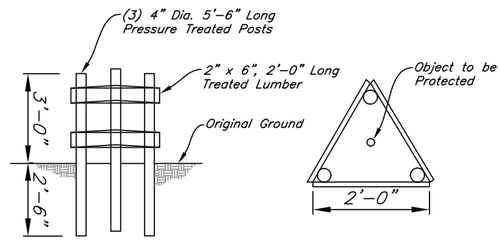

TYPICAL GUARD POST INSTALLATION
(Use to Protect Above Ground Appurtenances from Livestock)

MATERIAL LIST	
ITEM	*QUANTITY*
4" dia. 5'-6" Long Pressure Treated Posts	*3*
2" x 6" x 2'-0" Pressure Treated Lumber	*6*
3/8" Dia. 4" Long Lag Screws or #16 Ring Shank Nails	*24*

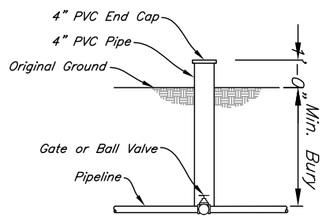

TYPICAL GATE OR BALL VALVE INSTALLATION
(IN RISER)

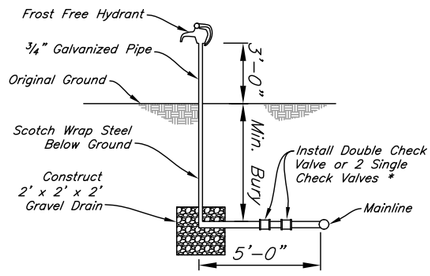

TYPICAL HYDRANT INSTALLATION

** Required if Mainline Serves Household or Other Potable Use.*

STOCKWATER PIPELINE APPURTENANCES
JOB PLAN 12B 05/2012

TANK SELECTION		
DATE	APPROVED	TITLE
01/24/05	Steven A. Guiesell	AE-FSO
04/04/05	Jay B. Cobb	SCE-SD
05/07/12	Jay B. Cobb	SCE-SD

TANK SELECTION GUIDE *

Tank Dia.	Gallons	Tank Dia.	Gallons	Tank Dia.	Gallons
6.0 Ft.	353	9.0 Ft.	794	12.0 Ft.	1,412
6.5 Ft.	414	9.5 Ft.	885	12.5 Ft.	1,532
7.0 Ft.	480	10.0 Ft.	981	13.0 Ft.	1,657
7.5 Ft.	552	10.5 Ft.	1,081	13.5 Ft.	1,787
8.0 Ft.	628	11.0 Ft.	1,187	14.0 Ft.	1,922
8.5 Ft.	708	11.5 Ft.	1,297		

** (Based on 20 Inches of Depth)*

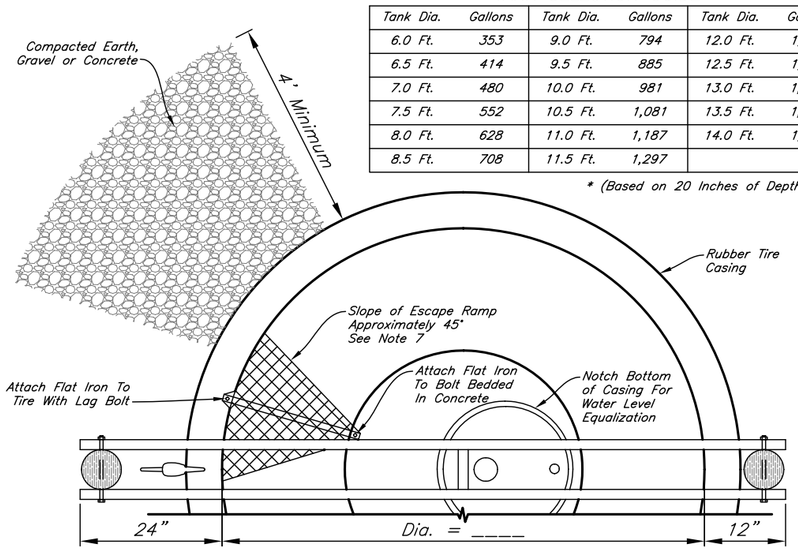

PLAN VIEW

TABLE OF QUANTITIES

Item	Unit	Quantity Per Tank (A)	Number of Tanks Planned (B)	Total Quantity For Project (A*B)	As-Built
Used Rubber Tire Casing	*Each*				
Concrete (Sackcrete)	*Bags*				
Bentonite	*Bags*				
2" x 6" Treated Lumber	*Each*				
6" Dia. 6'-0" Long Treated Posts	*Each*				
30" x 2' Concrete Casing with Lid	*Each*				
Frost Free Hydrant	*Each*				
Stop and Drain	*Each*				
PVC Drain	*Feet*				
Animal Escape Ramp	*Each*				

Volumes to Seal Tire Center		
Tank Dia.	*Sackcrete (80 lb. Bags)*	*Bentonite (50 lb. Bags)*
8 Ft.	*16 Bags*	*5 Bags*
10 Ft.	*20 Bags*	*6 Bags*
12 Ft.	*24 Bags*	*7 Bags*

TANK SELECTION		
	Tank Dia.	Gallons
Planned		
"As-Built"		

"As-Built" – Verify that the tank is 20 or more inches deep, measure the inside tank diameter, round to the nearest ½ foot and select the gallons from Tank Selection Guide.

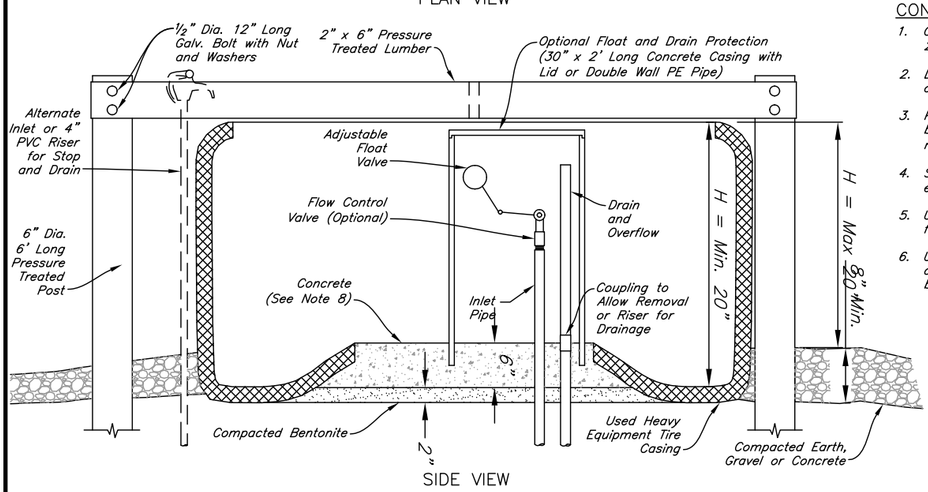

SIDE VIEW

CONSTRUCTION NOTES

1. *Overflow and drain pipe shall be minimum 2" diameter.*
2. *Drain pipe shall be graded to allow drainage of the tank.*
3. *Protect drain pipe at outlet end by backfilling over pipe with field stone, minimum 1 ½" diameter.*
4. *Set bottom of tank approximately 8" below existing ground level.*
5. *Use pre-mixed bags of sackcrete or equal for concrete.*
6. *Used tire casing shall be free of cuts, rips, and holes. Tire casing must not be worn beyond tread depth.*
7. *An animal escape ramp is required in the tank, which will provide a positive means of escape for any bird or animal. See Job Plan 13.1 for details.*
8. *Alternative methods to seal bottom with concrete and bentonite include: ½" thick steel plate, 1" thick rubber (conveyor belt material), or 3/16" thick fiberglass secured to tire bead with lag bolts and caulked with a silicone sealant to insure a good water tight seal.*
9. *A 4" PVC riser with cap shall be used for a stop and drain.*
10. *Hydrant or float and overflow must be protected by one of the shown protection systems or an approved alternative.*

STATEMENT OF COMPLIANCE

Construction (was) (was not) completed in accordance with approved construction plans and specifications.

_____
JAA Date

USED HEAVY EQUIPMENT TIRE CASING STOCKWATER TANK WITH BENTONITE AND CONCRETE BOTTOM

JOB PLAN 14.5C REV. 05/2012

TANK SELECTION		
DATE	APPROVED	TITLE
09/07/2005	Jay B. Cobb	SCE-SD
04/01/2008	Jay B. Cobb	SCE-SD
05/07/2012	Jay B. Cobb	SCE-SD

5/7/12 11:32 AM
Sheet of
Drawing No. ___
File No. Tanks_2012.dwg

NRCS
Natural Resources Conservation Service
United States Department of Agriculture

NAME: _____

WATERING FACILITY
Round Fiberglass Stockwater Tank

Sec. ____, T. ____, R. ____ _____ County, South Dakota

		Date
Designed		
Drawn		
Checked		
Approved		