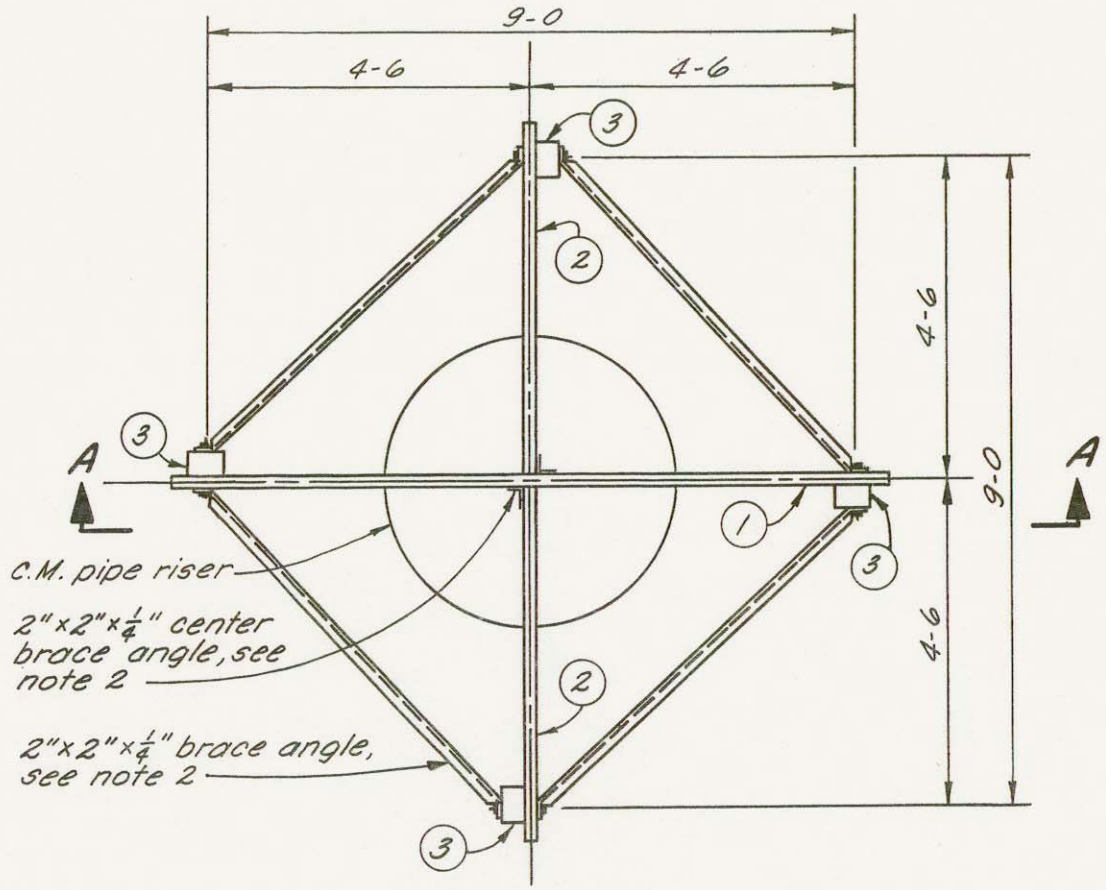

PLAN VIEW

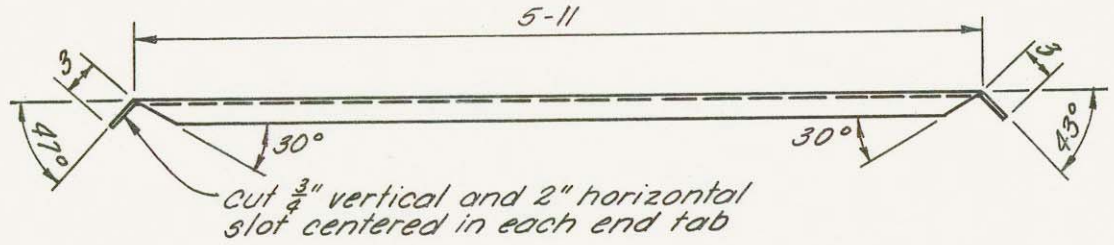

PLAN VIEW OF BRACE ANGLE

TABLE OF QUANTITIES

ITEM	MARK	NO. REQ'D.	QUANTITY
2" X 10" X 10' PRESSURE TREATED LUMBER	1	4	67 BD. FT.
2" X 10" X 4'-11" PRESSURE TREATED LUMBER	2	8	66 BD. FT.
4" X 6" X 8' PRESSURE TREATED POST	3	4	64 BD. FT.
2" X 2" X 1/4" X 6'-5" STEEL ANGLE		8	164 LB.
2" X 2" X 1/4" X 3'-2" STEEL ANGLE		2	20 LB.
5/8" X 8" STEEL BOLTS, NUTS, 2 WASHERS		32	32 SETS
1/2" X 3" STEEL BOLTS, NUTS, 2 WASHERS		32	32 SETS

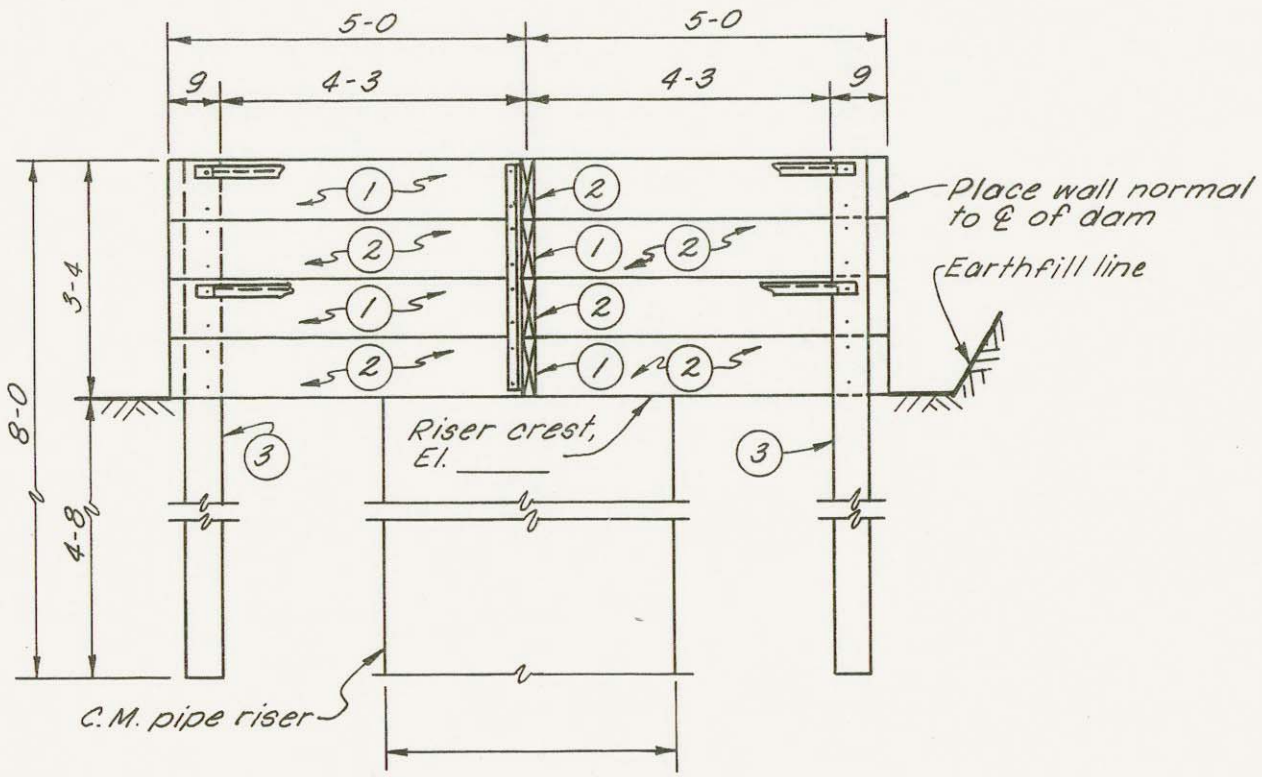

SECTIONAL ELEVATION A-A

NOTES:

1. TO 4" X 6" POSTS (4 REQUIRED) BOLT 2" X 10" BOARDS USING TWO 5/8" X 8" BOLTS PER 2" X 10" BOARD. DO NOT PLACE BOLTS CLOSER THAN 1 1/2" FROM EDGE OF BOARD.
2. FOR CENTER BRACE ANGLES DRILL 8 - 9/16" HOLES 5/8" FROM OUTER EDGE OF EACH LEG OF EACH ANGLE AND CENTERED 5 1/4" APART ALONG THE LEG.
3. ATTACH BRACE ANGLES TO TOP BOLT ON TOP 2" X 10" BOARD AND TO TOP BOLT ON NEXT TO BOTTOM BOARD.

TRASH RACK AND BAFFLE FOR RISER DIA. 36" THRU 60"

OPERATOR: _____

CONSERVATION DISTRICT: _____

U. S. DEPARTMENT OF AGRICULTURE
SOIL CONSERVATION SERVICE

	Date		
Designed		Approved by	
		Title	
Drawn			
		Title	
Traced		Sheet No.	Drawing No.
Checked		of	

JOB PLAN NO. 6.4

5,N-29,073.6-4a