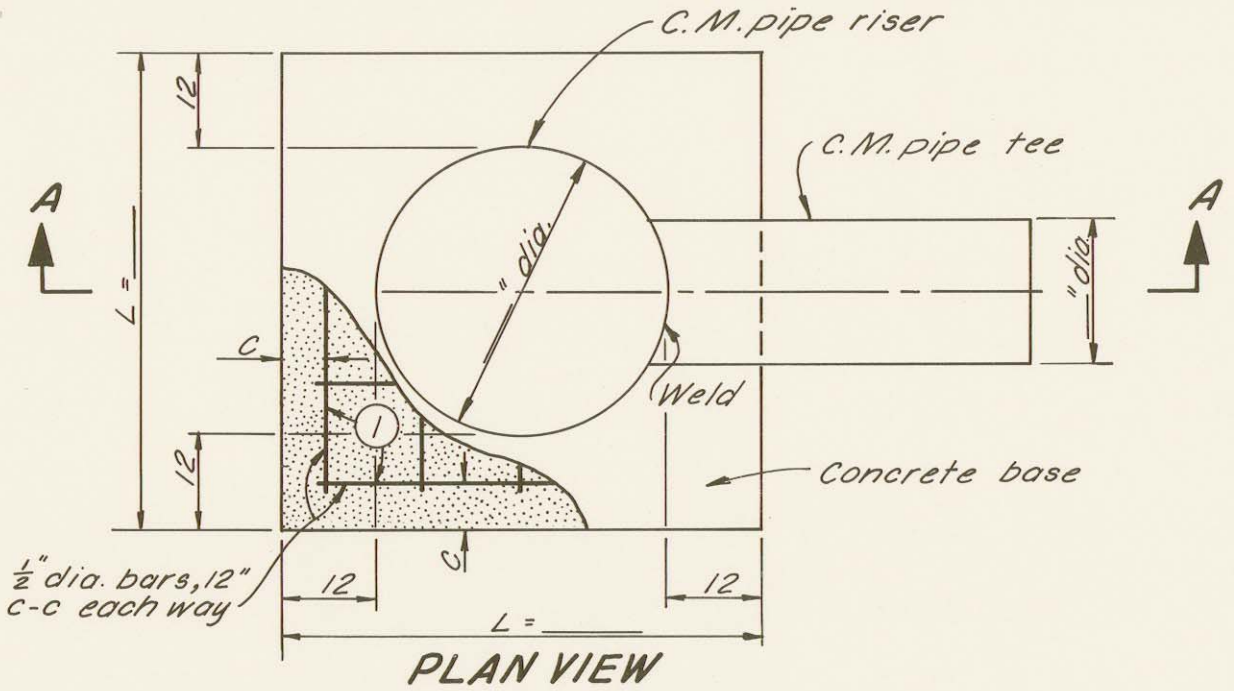


PLAN VIEW

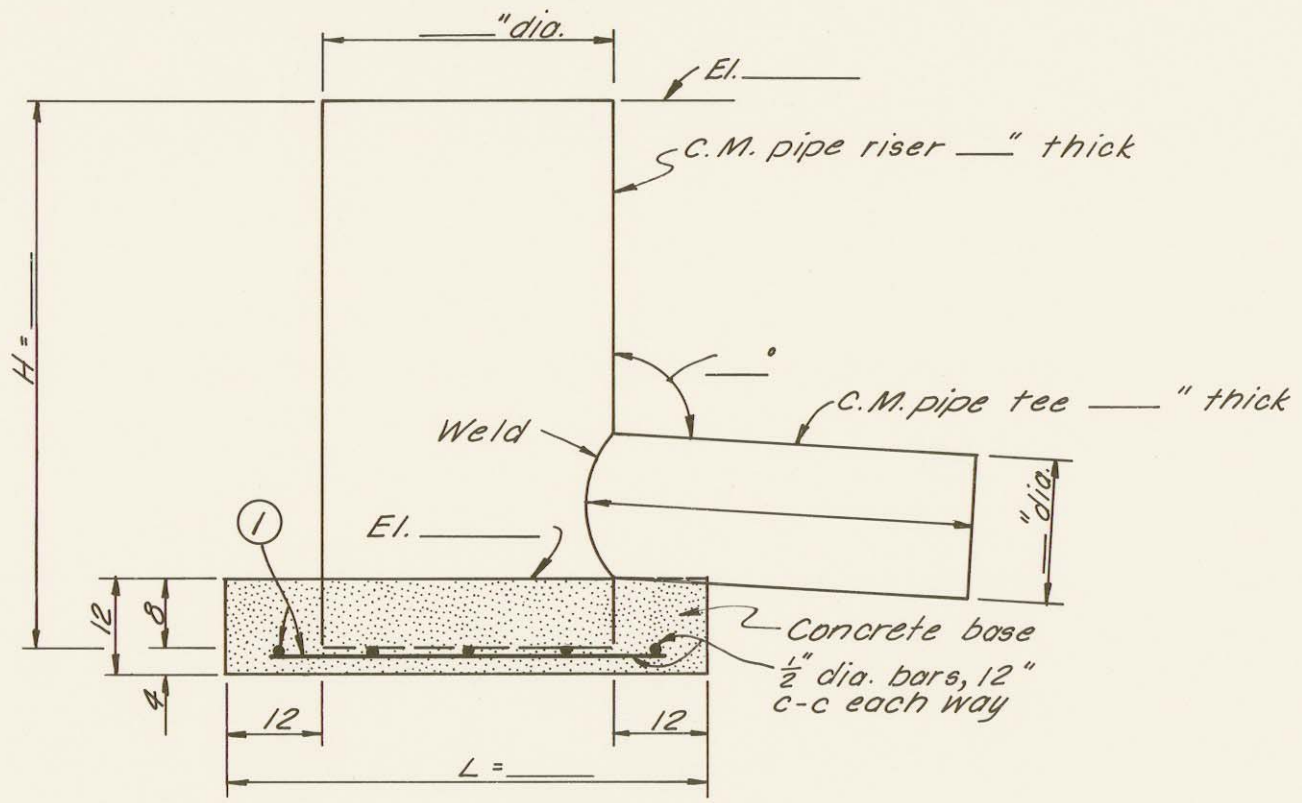


SECTIONAL ELEVATION A-A

## STEEL SCHEDULE

| RISER DIA. IN. | BAR SIZE | MARK | TYPE | NO. REQ'D. | LENGTH FT.-IN. | TOTAL LENGTH FT.-IN. | TOTAL WT. LB. | C IN. | L FT.-IN. |
|---|---|---|---|---|---|---|---|---|---|
| | 4 | 1 | STR. | | | | | | |

## TABLE OF QUANTITIES

| ITEM | UNIT | QUANTITY |
|---|---|---|
| CONCRETE | CU. YD. | |
| REINFORCING STEEL | LB. | |

NOTE: _____

# C.M. PIPE RISER WITH FABRICATED TEE

OPERATOR: _____

CONSERVATION DISTRICT: _____

U. S. DEPARTMENT OF AGRICULTURE
SOIL CONSERVATION SERVICE

| | Date | | |
|---|---|---|---|
| Designed | | Approved by | |
| | | Title | |
| Drawn | | Title | |
| Traced | | Sheet No. of | Drawing No. |
| Checked | | | |

REFERENCE: GUIDE PLAN NO. 5.3

JOB PLAN NO. 5.3

5,N-29,073.5-3a