STEEL SCHEDULE AND CONCRETE QUANTITIES

RISER DIA. IN.	BARREL DIA. IN.	BAR SIZE	MARK	TYPE	NO. REQ'D.	LENGTH FT.-IN.	TOTAL LENGTH FT.-IN.	TOTAL WT. LB.	CONC. CU. YD.	C IN.	L FT.-IN.

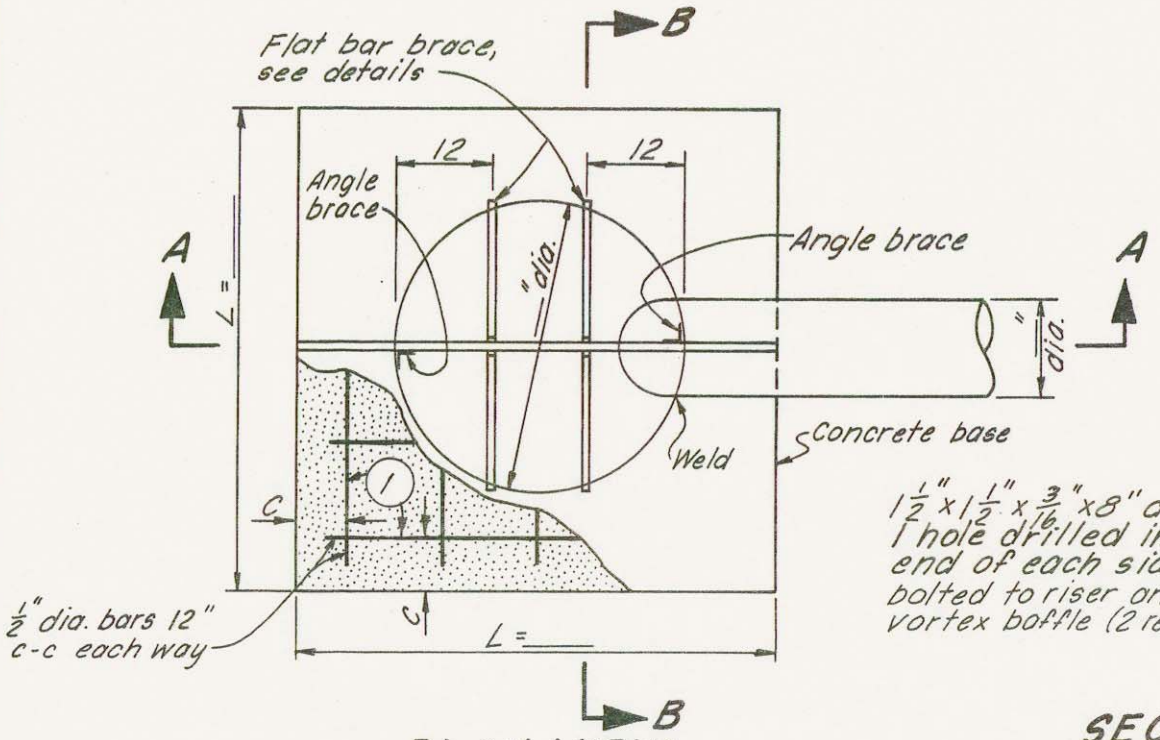

PLAN VIEW

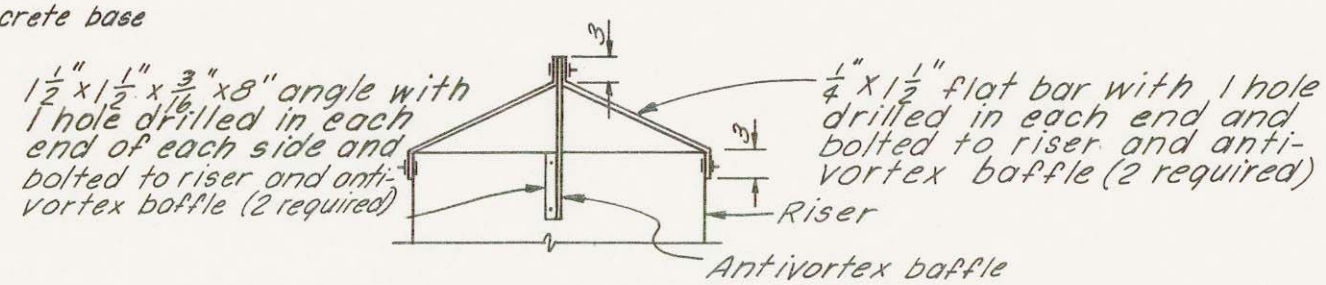

SECTIONAL ELEVATION B-B

STRUCTURAL STEEL AND ANTIVORTEX BAFFLE QUANTITIES

RISER DIA. IN.	D IN.	N IN.	O FT.-IN.	BAFFLE AREA SQ.FT.	BAFFLE WT.LB.	1/4" X 1 1/2" FLAT BAR LENGTH, FT. IN.	NO. REQ'D.	FLAT BAR WT. LB.	1 1/2" X 1 1/2" X 3/16" ANGLE INCHES	NO. REQ'D.	ANGLE WT. LB.

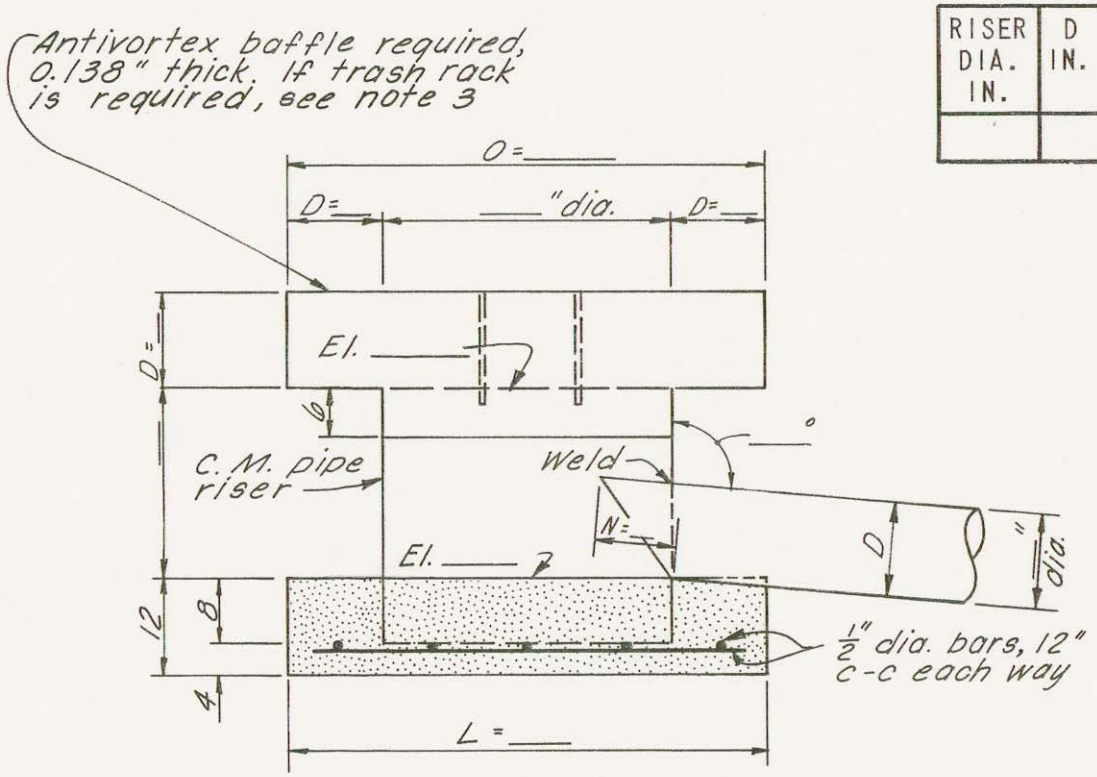

SECTIONAL ELEVATION A-A

NOTES:

1. ALL CUTS SHALL BE SAW OR SHEAR CUTS.
2. ALL GALVANIZING DAMAGED BY CUTTING, DRILLING, OR WELDING SHALL BE REPAIRED BY PAINTING WITH TWO COATS OF ZINC DUST-ZINC OXIDE PRIMER.
3. FOR TRASH RACK AND BAFFLE DETAILS, SEE PLAN SERIES 6.
4. ALL BOLTS SHALL HAVE A NUT AND SPLIT WASHER.
5. ALL BOLTS, NUTS, AND WASHERS SHALL BE GALVANIZED, CADMIUM PLATED, OR STAINLESS STEEL.
6. HOLES IN BRACES SHALL BE SPACED AND LOCATED TO MATCH CORRUGATIONS IN PIPE AND BAFFLE.

RISER AND HOOD INLET COMBINATION

OPERATOR: _____

CONSERVATION DISTRICT: _____

U. S. DEPARTMENT OF AGRICULTURE
SOIL CONSERVATION SERVICE

	Date		
Designed		Approved by	
		Title	
Drawn		Title	
Traced		Sheet No. of	Drawing No.
Checked			

REFERENCE: GUIDE PLAN NO. 5.4

JOB PLAN NO. 5.4

5,N-29,073.5-4a