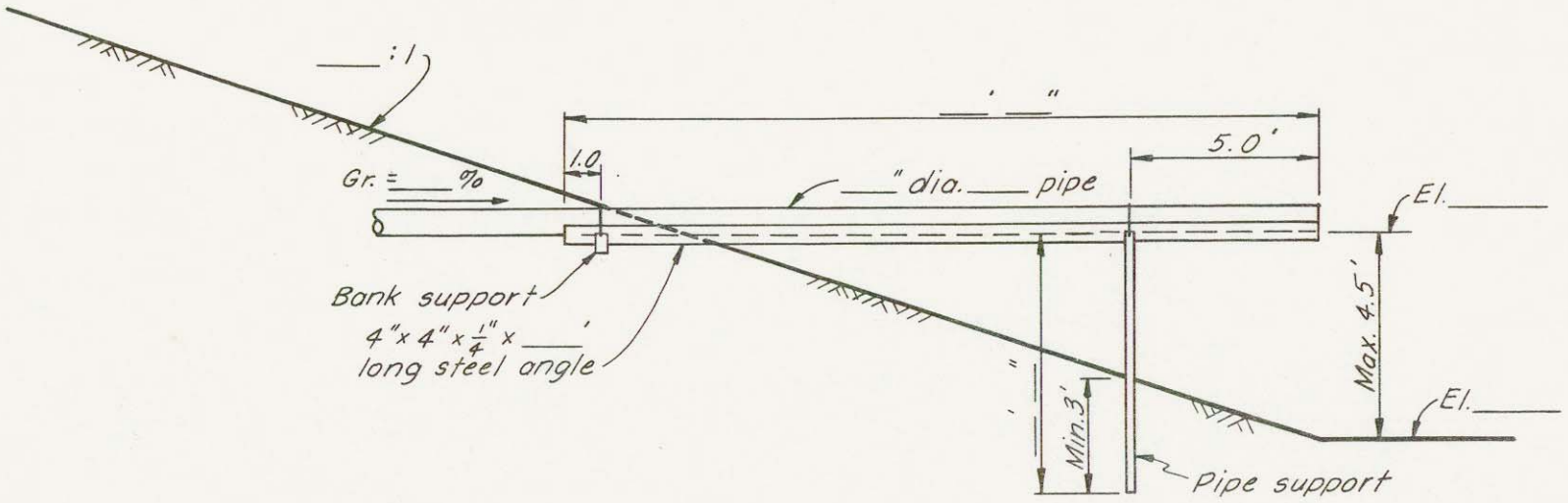

PROFILE ALONG ℄ OF OUTLET END OF PIPE

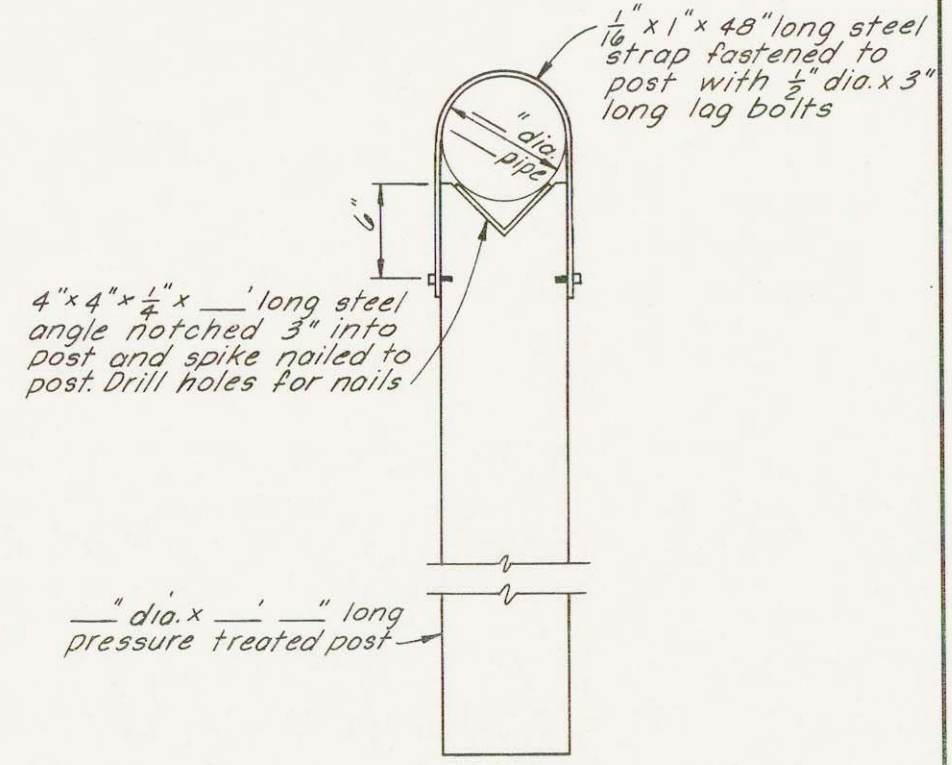

ELEVATION OF POST PIPE SUPPORT

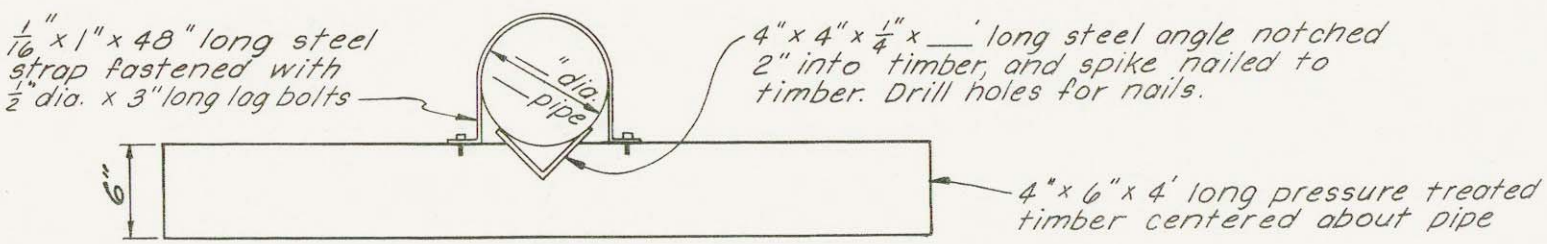

ELEVATION OF BANK PIPE SUPPORT

TABLE OF QUANTITIES

ITEM	UNIT	QUANTITY
4" X 6" X 4' LONG PRESSURE TREATED TIMBER	EACH	1
___" DIA. X ___' LONG PRESSURE TREATED POST	EACH	1
4" X 4" X 1/4" STEEL ANGLE (___')(6.6 LB./FT.)	LB.	
1/16" X 1" X 48" LONG STEEL STRAP	EACH	2
1/2" DIA. X 3" LONG, LAG BOLTS	EACH	4

NOTE: JOB PLAN LIMITED TO MAXIMUM 8" DIA. PIPE AND 20' LONG STEEL ANGLE

PIPE SUPPORT FOR OUTLET PIPE

OPERATOR: _____

CONSERVATION DISTRICT: _____

U. S. DEPARTMENT OF AGRICULTURE
SOIL CONSERVATION SERVICE

	Date		
Designed		Approved by	
		Title	
Drawn			
		Title	
Traced		Sheet No. of	Drawing No.
Checked			

JOB PLAN NO. 4.2

USDA-SCS-LINCOLN, NEB. 1972

5, N-29, 073.4 - 20