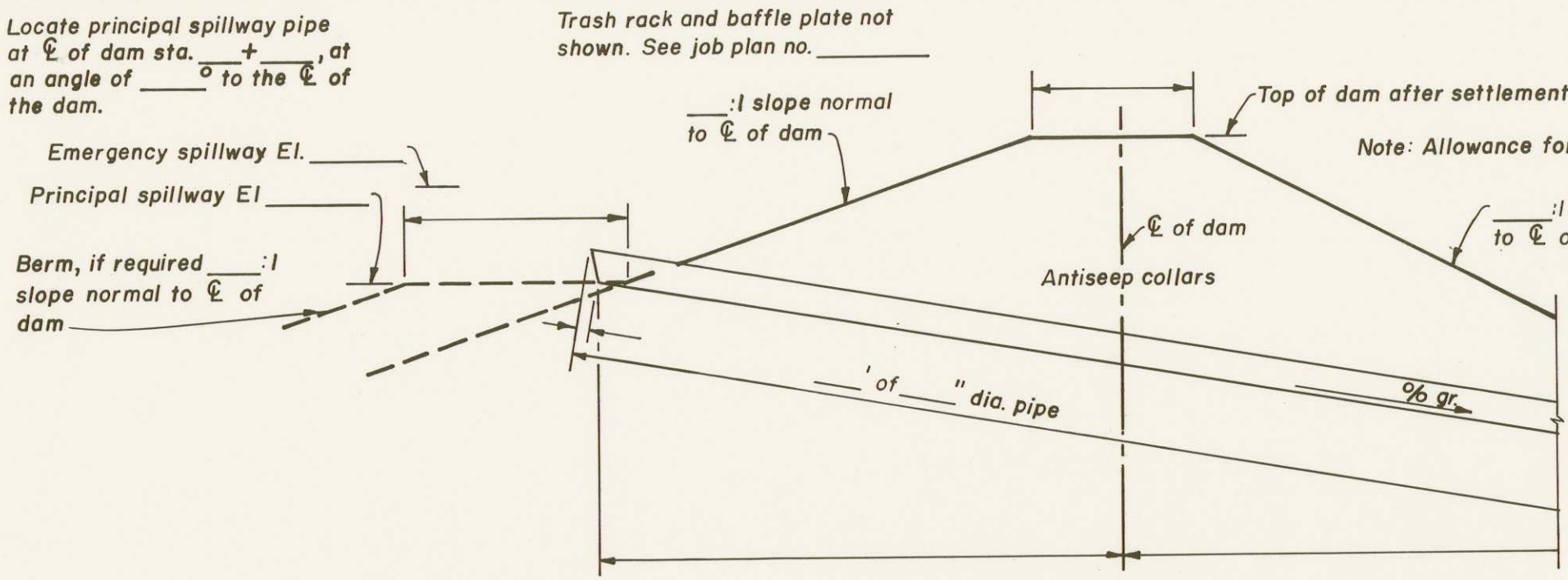

CROSS SECTION OF DAM ALONG ℄ OF PRINCIPAL SPILLWAY

(Not to scale)

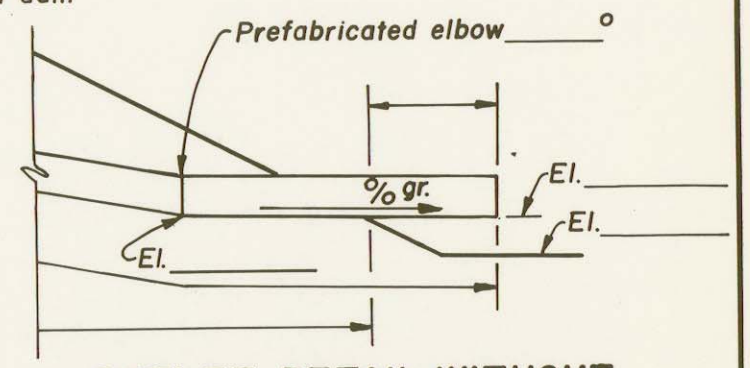

OUTLET DETAIL WITHOUT PIPE SUPPORT

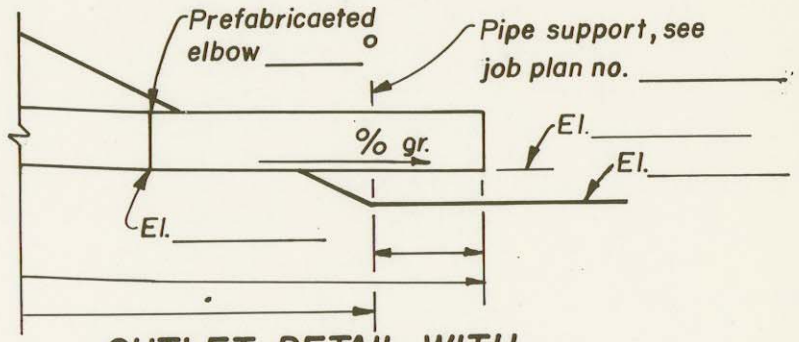

OUTLET DETAIL WITH PIPE SUPPORT

Sec. _____ T. _____, R. _____

_____ County

LOCATION

SPECIFICATION NOTES

1. ELBOW IF REQUIRED MAY BE FABRICATED BY CONTINUOUS WELDING SEPERATE PIPE SECTIONS OR BY FABRICATING A CONTINUOUS WELDED JOINT ON THE UPSTREAM END OF LAST SECTION OF PIPE.
2. PIPE WALL THICKNESS SHALL BE ____ GAGE OR ____ INCHES.

TABLE OF QUANTITIES

ITEM	UNIT	QUANTITY

APPLICABLE STANDARD S.C.S. SPECIFICATIONS

_____

_____

_____

_____

HOOD INLET PRINCIPAL SPILLWAY

OPERATOR _____

CONSERVATION DISTRICT _____

U. S. DEPARTMENT OF AGRICULTURE
SOIL CONSERVATION SERVICE

	Date		
Designed		Approved by	
Drawn		Title	
Traced		Title	
Checked		Sheet No of	Drawing No.

REFERENCE: GUIDE PLAN NO. 2.1

Rev. 8/80

JOB PLAN NO. 2.1