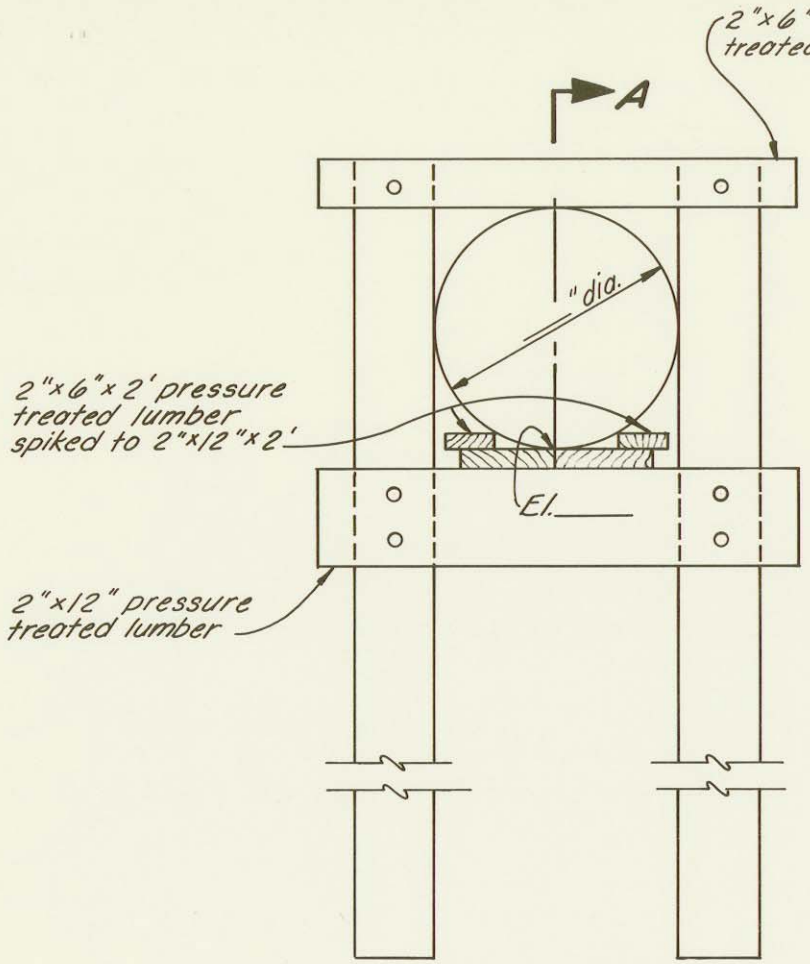

ELEVATION

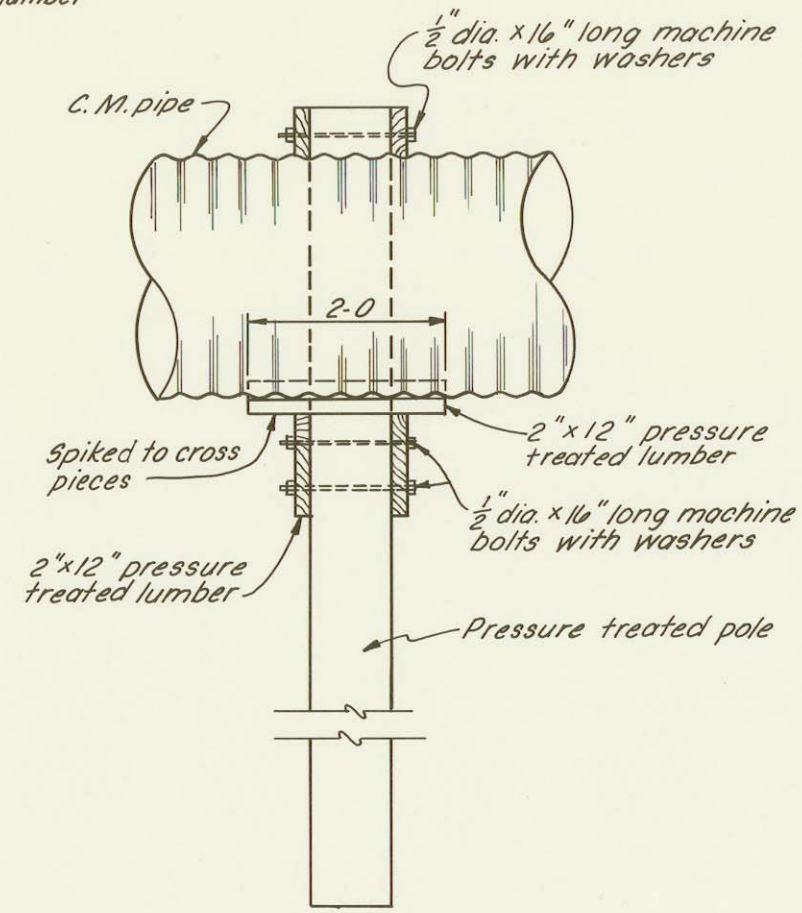

SECTIONAL ELEVATION A-A

NOTES:

1. HAND OR MACHINE TAMP BACKFILL THOROUGHLY AROUND FOOTINGS AND COLUMNS.

TABLE OF QUANTITIES

ITEM	LENGTH FOR ___" DIA. C.M. PIPE	UNIT	QUANTITY
PRESSURE TREATED POLE ____"DIA.		EACH	
2" X 12" PRESSURE TREATED LUMBER		EACH	
2" X 6" PRESSURE TREATED LUMBER		EACH	
2" X 12" PRESSURE TREATED LUMBER		EACH	
2" X 6" PRESSURE TREATED LUMBER		EACH	
1/2" DIA. MACHINE BOLTS WITH NUTS		EACH	
1/2" DIA. WASHERS		EACH	

TIMBER PIPE SUPPORT

OPERATOR: _____

CONSERVATION DISTRICT: _____

U. S. DEPARTMENT OF AGRICULTURE
SOIL CONSERVATION SERVICE

	Date		
Designed		Approved by	
		Title	
Drawn			
		Title	
Traced		Sheet No of	Drawing No.
Checked			

REFERENCE: GUIDE PLAN NO. 4.0

JOB PLAN NO. 4.0

5,N-29,073.4a