Instructions for South Dakota Job Plan 6.5

Trash Screen for Debris Basin Drain Pipe

Fill in the blue data fields on this page to automatically fill in the title block areas on the drawing. Left click blue data fields to type in required information.

Clear Form

Title block

Producer	Hubert Holmes
1/4 Section	SW 1/4
Section	15
Township	99W
Range	48N
County	Beadle
Conservation District	Beadle

Who / When	Who (initials)	When (MM/DD/YY)
Designed	WMD	11/10/05
Drawn	WMD	11/15/05
Checked	KLT	11/17/05
Approved	JBC	11/21/05

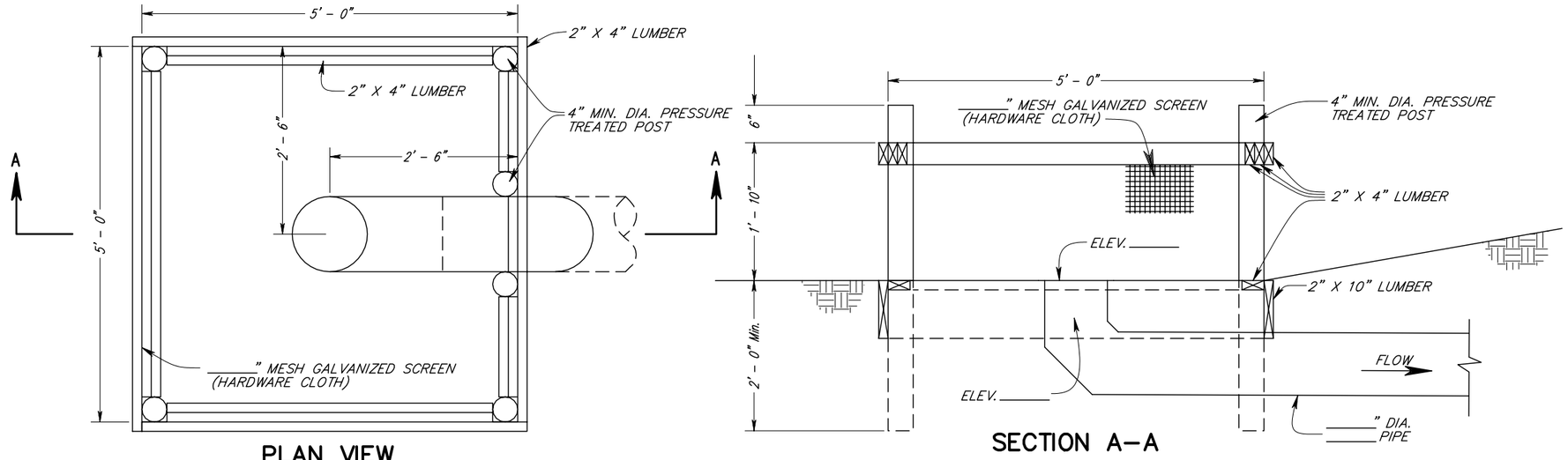

PLAN VIEW

SECTION A–A

TYPE A

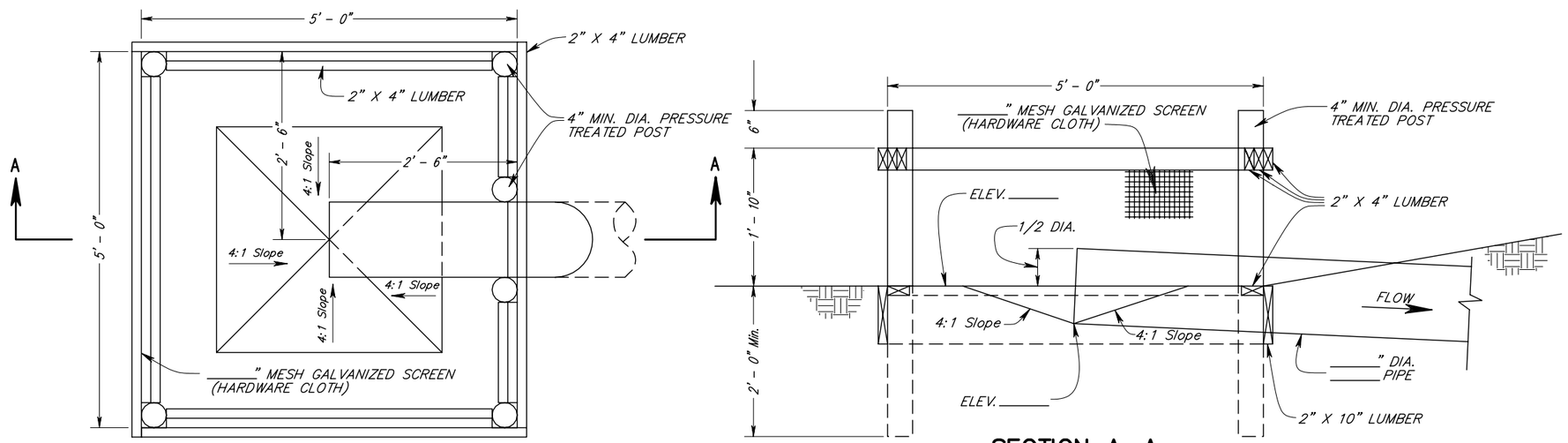

PLAN VIEW

SECTION A–A

TYPE B

TABLE OF QUANTITIES

ITEM NO.	ITEM	UNIT	QUANTITY
1	___" Mesh Galvanized Screen (Hardware Cloth), Type C	SQ. FT.	40
2	4" min. Diameter Pressure Treated Posts	EA	6
3	2" X 4" Treated Lumber	LIN. FT.	48
4	2" X 10" Treated Lumber	LIN. FT.	21
6	Barbed Wire	LIN. FT.	53

NOTES:

1. PLACE WIRE MESH BETWEEN THE 2" X 4" AND THE 2" X 10" LUMBER AND FASTEN BOARDS TOGETHER.

2. USE 1/2" WIRE MESH FOR CATTLE LOTS AND 1/4" WIRE MESH FOR HOG LOTS.

3. LUMBER SHALL BE PRESSURE TREATED LUMBER OR REDWOOD (REFERENCE – CONSTRUCTION SPECIFICATION SD–16).

4. USE 3 1/2" LONG LAG SCREWS, OR 4" LONG RING–SHANK OR ROSIN COATED NAILS AS FASTENERS.

5. CROSS OUT PLAN THAT IS NOT APPLICABLE.

TRASH SCREEN FOR DEBRIS BASIN DRAIN PIPE

JOB PLAN 6.5 06/2004

REVISIONS		
DATE	APPROVED	TITLE
06/23/2004	Joy B. Cobb	SZE–SD

		Date
Designed	WMD	11/10/05
Drawn	WMD	11/15/05
Checked	KLT	11/17/05
Approved	JBC	11/21/05

PRODUCER Hubert Holmes
SW 1/4 SECTION 15 T.99W R. 48N
Beadle COUNTY
Beadle CONSERVATION DISTRICT

USDA – NRCS
State Office Engineering Staff
200 Fourth Street SW
Huron, South Dakota 57350

NRCS
Natural Resources Conservation Service
United States Department of Agriculture

File Name: TrashScreen6.5_060704.pro

Drawing No.

7/16/2004 9:41AM

Sheet 1 of 1