INPUT DATA FOR JOB PLAN 23.3

Fill in the information identified in the blocks that are highlighted. This information will be populated onto the Job Plan.

Producer: _____

¼ Section: SE

Section: _____

Township: _____

Range: _____

County: Ziebach

Drawing No: _____

Sheet #: _____ of Sheet#: _____

DESIGNERS INFORMATION:

Designed By: _____ Design Date: _____

Drawn By: _____ Drawn Date: _____

Checked By: _____ Check Date: _____

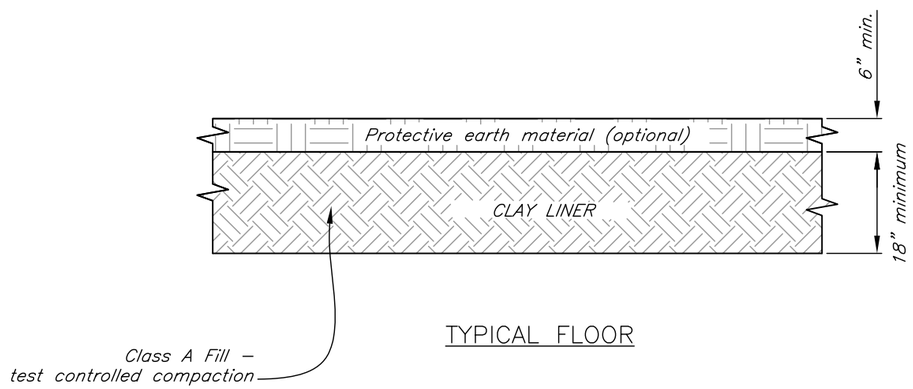

TYPICAL FLOOR

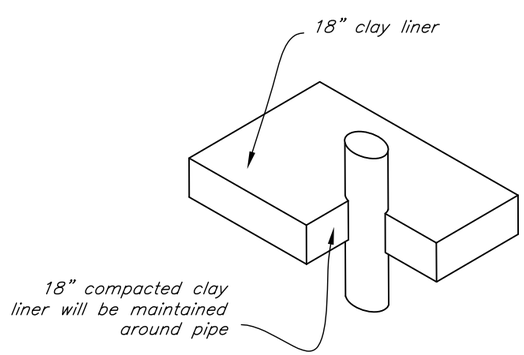

PIPE PENETRATIONS

LINER NOTES

1. A minimum 18" thick compacted clay liner shall be installed in accordance with SD Construction Specification SD–7A except that the liner shall be compacted to 95% of Standard Proctor and the moisture content of the Class A fill shall be maintained between optimum moisture +2% to optimum moisture +4% or as specified in the construction specifications. Post–construction testing of the liner is required as outlined in the specifications and the testing results shall be submitted to NRCS as soon as they are available.
2. One or more layers of earthen material are recommended for placement above the clay liner. These layers are designed to prevent damage to the clay liner during manure removal. If the liner is damaged during manure removal, it will require repair and post–construction testing to verify the soil hydraulic conductivity is acceptable as repaired.

JOB PLAN 23.3 05/2012

REVISIONS		
DATE	APPROVED	TITLE
05/29/12	Jay B. Cobb	SCE – SD

Date

Designed

Drawn

Checked

Approved

County, SD

CLAY LINER DETAILS
FOR SOLID MANURE STORAGE

NRCS
Natural Resources Conservation Service
United States Department of Agriculture

File No.
Liners.dwg

Drawing No.

Sheet of