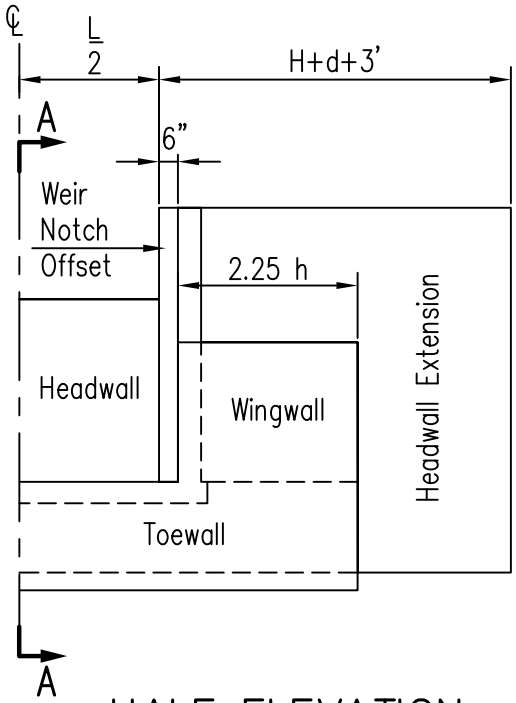

HALF ELEVATION

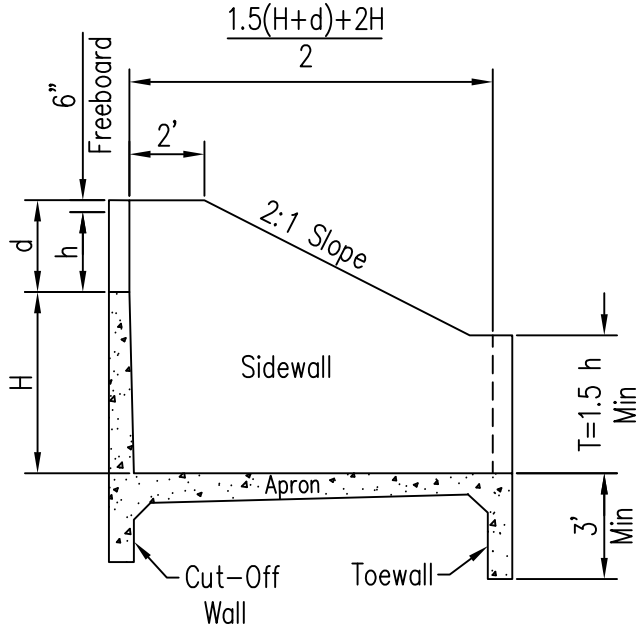

SECTION A–A

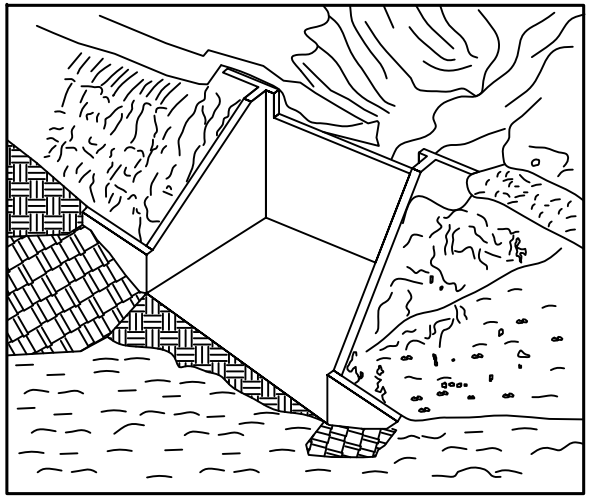

PERSPECTIVE VIEW

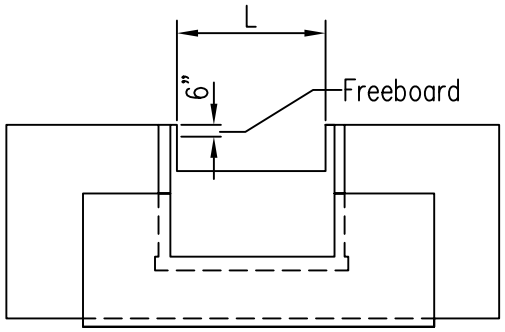

FRONT VIEW

CHART SHOWING CAPACITY OF WEIRS								
HEAD h	LENGTH OF WEIR OPENING "L" IN FEET							
	6'–0"	8'–0"	10'–0"	12'–0"	14'–0"	16'–0"	18'–0"	20'–0"
1'–6"	34.9	47.1	59.3	71.6	83.8	96.1	108	121
2'–0"	52.8	71.6	90.4	109	128	147	166	185
2'–6"	72.4	98.7	125	151	178	204	230	257
3'–0"	93.4	128	162	197	232	266	301	336
3'–6"	116	159	203	246	290	333	377	421

CAPACITY OF WEIRS

$Q=3.33\ (L-0.2h)\ h^{3\backslash 2}$

NOTE:
STRUCTURE DATA SHEET MUST ACCOMPANY REQUEST FOR DETAIL PLANS.

DESIGN DATA

fs =18,000, fc =2,000, fc =800, v =40 u =100
Stresses in pounds per square inch.
Trapezoidal loading on headwall = 60 lbs per square foot, on sidewalls = 40 lbs per square foot.
Steel cover = 2", except on earth = 3".
Where possible, all steel shall be secured in place before concrete is poured.
Only material conforming to A.S.T.M. shall be used.
Steel to be intermediate grade new billet deformed. bars.
Fillets may be used on inside corners if desired.
Curved lip and entrance are optional.
Construction joints, when necessary, to be formed by using beveled 2"x4".
Steel weights do not allow for waste due to cutting.
If footings are required, add 10% to steel weights and 15% to volume of concrete.

"B" = Dams with buttresses

Revised 3–11–46

REINFORCED CONCRETE
NOTCH SPILLWAY DAMS

RELATIVE DIMENSIONS CONCRETE AND STEEL
QUANTITIES, DRAWING NUMBERS, WEIR CAPACITIES

REGION 5 REGIONAL OFFICE

U.S. DEPARTMENT AGRICULTURE
SOIL CONSERVATION SERVICE
H. H. Bennett, Chief

REFERENCE: File No. 6.12.1A
Sheet 1 of 2

CARTOGRAPHIC APPROVAL: TECHNICAL APPROVAL

DESIGN	DRAWN	CHECKED	DATE	DRAWING NO
G. W. FOSTER	C.L. TULE	G. W. FOSTER	10–17–1941	3–L–4100

IL–SCS
OCTOBER 1969

Head Wall Height		Total Weir Depth h+6"	LENGTH OF WEIR OPENING "L" IN FEET															
			6'-0'		8'-0"		10'-0"		12'-0"		14'-0"		16'-0"		18'-0"		20'-0"	
H	h	d	Dwg No.		Dwg No.		Dwg No.		Dwg No.		Dwg No.		Dwg No.		Dwg No.		Dwg No.	
			Conc. Cu.Yd.	Steel Lbs	Conc. Cu.Yd.	Steel Lbs	Conc. Cu.Yd.	Steel Lbs	Conc. Cu.Yd.	Steel Lbs	Conc. Cu.Yd.	Steel Lbs	Conc. Cu.Yd.	Steel Lbs	Conc. Cu.Yd.	Steel Lbs	Conc. Cu.Yd.	Steel Lbs
3'-0"	1'-6"	2'-0"	4110		4111		4112		4113		4114		4115		4116		4117	
			7.0	400	7.7	445	8.3	499	8.9	539	9.5	593	10.2	651	10.8	697	11.5	741
	2'-0"	2'-6"	4130		4131		4132		4133		4134		4135		4136		4137	
			7.7	449	8.4	492	9.1	552	9.7	594	10.4	652	11.1	712	11.8	759	12.4	808
	2'-6"	3'-0"	4150		4151		4152		4153		4154		4155		4156		4157	
			8.5	519	9.2	563	9.9	624	10.5	672	11.2	727	11.9	791	12.6	840	13.3	885
	3'-0"	3'-6"	4170		4171		4172		4173		4174		4175		4176		4177	
			9.4	615	10.1	662	10.8	724	11.5	775	12.3	832	13.0	893	13.7	946	14.4	987
4'-0"	1'-6"	2'-0"	4210		4211		4212		4213		4214		4215		4216		4217	
			9.4	605	10.3	670	11.2	746	12.0	808	12.9	883	13.8	965	14.6	1029	15.5	1093
	2'-0"	2'-6"	4230		4231		4232		4233		4234		4235		4236		4237	
			10.3	665	11.2	731	12.1	811	13.0	876	13.9	954	14.8	1037	15.7	1106	16.6	1179
	2'-6"	3'-0"	4250		4251		4252		4253		4254		4255		4256		4257	
			11.0	701	11.9	767	12.8	849	13.7	911	14.6	993	15.5	1075	16.4	1142	17.3	1207
	3'-0"	3'-6"	4270		4271		4272		4273		4274		4275		4276		4277	
			12.6	869	13.6	952	14.5	1034	15.5	1103	16.4	1211	17.3	1288	18.2	1361	19.2	1435
5'-0"	1'-6"	2'-0"	4310		4311		4312		4313		4314		4315		4316		4317	
			11.2	746	12.2	829	13.2	926	14.2	1004	15.2	1105	16.2	1203	17.2	1286	18.2	1368
	2'-0"	2'-6"	4330		4331		4332		4333		4334		4335		4336		4337	
			12.0	911	13.0	1004	14.0	1108	15.0	1197	16.0	1337	17.1	1418	18.1	1521	19.1	1613
	2'-6"	3'-0"	4350		4351		4352		4353		4354		4355		4356		4357	
			13.5	993	14.6	1084	15.6	1191	16.7	1280	17.7	1423	18.8	1514	19.8	1606	20.8	1728
	3'-0"	3'-6"	4370		4371		4372		4373		4374		4375		4376		4377	
			15.4	1113	16.4	1215	17.5	1314	18.6	1407	19.6	1551	20.6	1643	21.7	1763	22.8	1858
6'-0"	1'-6"	2'-0"	4410		4411		4412		4413		4414		4415		4416		4417	
			14.0	1045	15.2	1150	16.3	1267	17.5	1379	18.6	1513	19.7	1721	20.9	1834	22.1	1969
	2'-0"	2'-6"	4430		4431		4432		4433		4434		4435		4436		4437	
			15.3	1133	16.4	1238	17.6	1351	18.7	1521	19.9	1676	21.0	1796	22.2	2050	23.3	2180
	2'-6"	3'-0"	4450		4451		4452		4453		4454		4455		4456		4457	
			16.0	1306	17.2	1429	18.3	1541	19.3	1723	20.6	1854	21.8	2113	23.0	2242	24.2	2439
	3'-0"	3'-6"	4470		4471		4472		4473		4474		4475		4476		4477	
			17.7	1450	18.8	1578	20.0	1692	21.2	1881	22.4	2021	23.6	2287	24.8	2442	26.0	2583

Head Wall Height		Total Weir Depth h+6"	LENGTH OF WEIR OPENING "L" IN FEET															
			6'-0'		8'-0"		10'-0"		12'-0"		14'-0"		16'-0"		18'-0"		20'-0"	
H	h	d	Dwg No.		Dwg No.		Dwg No.		Dwg No.		Dwg No.		Dwg No.		Dwg No.		Dwg No.	
			Conc. Cu.Yd.	Steel Lbs	Conc. Cu.Yd.	Steel Lbs	Conc. Cu.Yd.	Steel Lbs	Conc. Cu.Yd.	Steel Lbs	Conc. Cu.Yd.	Steel Lbs	Conc. Cu.Yd.	Steel Lbs	Conc. Cu.Yd.	Steel Lbs	Conc. Cu.Yd.	Steel Lbs
7'-0"	1'-6"	2'-0"	4510		4511		4512		4513		4514		4515		4516		4517	
			16.5	1410	17.6	1593	19.1	1715	20.4	1856	21.6	2018	22.9	2171	24.2	2328	25.5	2462
	2'-0"	2'-6"	4530		4531		4532		4533		4534		4535		4536		4537	
			17.2		18.5	1647	19.8	1770	21.1	1919	22.4	2026	23.7	2226	26.0	2406	27.4	2512
	2'-6"	3'-0"	4550		4551		4552		4553		4554		4555		4556		4557	
			19.1		20.4	1894	21.7	2009	23.0	2172	24.3	2320	26.8	2762	B 29.5	2789	B 31.0	2802
	3'-0"	3'-6"	4570		4571		4572		4573		4574		4575		4576		4577	
			20.5		21.8	1908	23.1	2095	24.4	2205	26.8	2389	28.2	2564	B 30.7	2875	B 32.2	2934
8'-0"	1'-6"	2'-0"	4610		4611		4612		4613		4614		4615		4616		4617	
			20.8		22.2		23.6	1996	25.1	2134	26.5	2352	29.4	2503	B 30.9	3032	B 32.3	3028
	2'-0"	2'-6"	4630		4631		4632		4633		4634		4635		4636		4637	
			22.0		23.5		24.9	2012	26.3	2125	27.7	2250	B 30.7		B 32.2		B 33.7	
	2'-6"	3'-0"	4650		4651		4652		4653		4654		4655		4656		4657	
			24.2		25.6		27.0	2144	28.4	2266	B 31.2		B 32.7	2796	B 34.2		B 35.6	
	3'-0"	3'-6"	4670		4671		4672		4673		4674		4675		4676		4677	
			25.8		27.2		28.6	2556	30.0	2759	B 32.8	2740	B 34.3	3015	B 35.8	3231	B 37.3	3427
9'-0"	1'-6"	2'-0"	4710		4711		4712		4713		4714		4715		4716		4717	
	2'-0"	2'-6"	4730		4731		4732		4733		4734		4735		4736		4737	
	2'-6"	3'-0"	4750		4751		4752		4753		4754		4755		4756		4757	
	3'-0"	3'-6"	4770		4771		4772		4773		4774		4775		4776		4777	
					36.0	2874			39.4	3132			44.5	3512				
10'-0"	1'-6"	2'-0"	4810		4811		4812		4813		4814		4815		4816		4817	
	2'-0"	2'-6"	4830		4831		4832		4833		4834		4835		4836		4837	
							40.8	3313										
	2'-6"	3'-0"	4850		4851		4852		4853		4854		4855		4856		4857	
							41.0	3339			B 46.7	3797			B 50.5	4152		
	3'-0"	3'-6"	4870		4871		4872		4873		4874		4875		4876		4877	

CONCRETE AND STEEL QUANTITIES, DRAWING NUMBERS AND WEIR CAPACITIES

NOTES: (11-2012)
To use the 4100 series standard drop spillway Drawings:
1. All #3 reinforcement bars should be changed to #4, and steel weights increased accordingly.
2. Use only where the ratio of weir depth to headwall height (d/H) < 0.5, unless provisions are made to armor the downstream channel against scour.

"B" = Dams with buttresses

Revised 3-11-46

REINFORCED CONCRETE NOTCH SPILLWAY DAMS
RELATIVE DIMENSIONS CONCRETE AND STEEL
QUANTITIES, DRAWING NUMBERS, WEIR CAPACITIES
REGION 5 REGIONAL OFFICE
U.S. DEPARTMENT AGRICULTURE
SOIL CONSERVATION SERVICE
H. H. Bennett, Chief
REFERENCE: File No. 6.12.1B Sheet 2 of 2
CARTOGRAPHIC APPROVAL: TECHINICAL APPROVAL

DESIGN	DRAWN	CHECKED	DATE	DRAWING NO
G. W. FOSTER	C.L. TULE	G. W. FOSTER	10-17-1941	3-L-4100

IL-SCS
OCTOBER 1969

(210-EFH, Notice IL57, December 2012)

6-12.1b