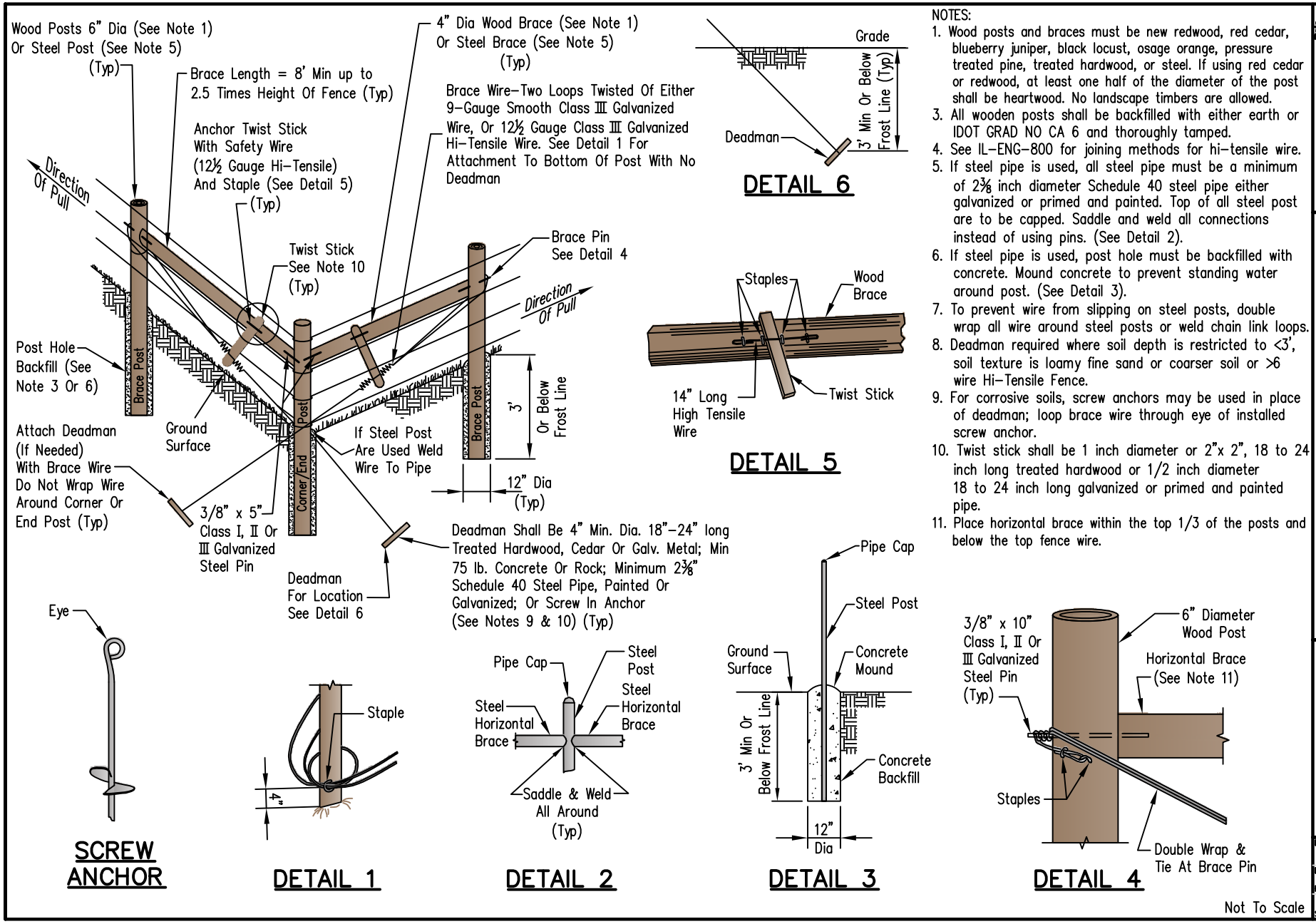


NOTES:

1. Wood posts and braces must be new redwood, red cedar, blueberry juniper, black locust, osage orange, pressure treated pine, treated hardwood, or steel. If using red cedar or redwood, at least one half of the diameter of the post shall be heartwood. No landscape timbers are allowed.
3. All wooden posts shall be backfilled with either earth or IDOT GRAD NO CA 6 and thoroughly tamped.
4. See IL-ENG-800 for joining methods for hi-tensile wire.
5. If steel pipe is used, all steel pipe must be a minimum of 2⅜ inch diameter Schedule 40 steel pipe either galvanized or primed and painted. Top of all steel post are to be capped. Saddle and weld all connections instead of using pins. (See Detail 2).
6. If steel pipe is used, post hole must be backfilled with concrete. Mound concrete to prevent standing water around post. (See Detail 3).
7. To prevent wire from slipping on steel posts, double wrap all wire around steel posts or weld chain link loops.
8. Deadman required where soil depth is restricted to <3', soil texture is loamy fine sand or coarser soil or >6 wire Hi-Tensile Fence.
9. For corrosive soils, screw anchors may be used in place of deadman; loop brace wire through eye of installed screw anchor.
10. Twist stick shall be 1 inch diameter or 2"x 2", 18 to 24 inch long treated hardwood or 1/2 inch diameter 18 to 24 inch long galvanized or primed and painted pipe.
11. Place horizontal brace within the top 1/3 of the posts and below the top fence wire.

| | | Date |
|---|---|---|
| Designed | | |
| Drawn | M. QUINONES | 7/12 |
| Checked | | |
| Approved | | |

# CORNER BRACE ASSEMBLY SINGLE H WITH DEADMAN

NRCS
Natural Resources Conservation Service
United States Department of Agriculture

File No. IL-ENG-821
Drawing Set
Page 1 of 1
Sheet of