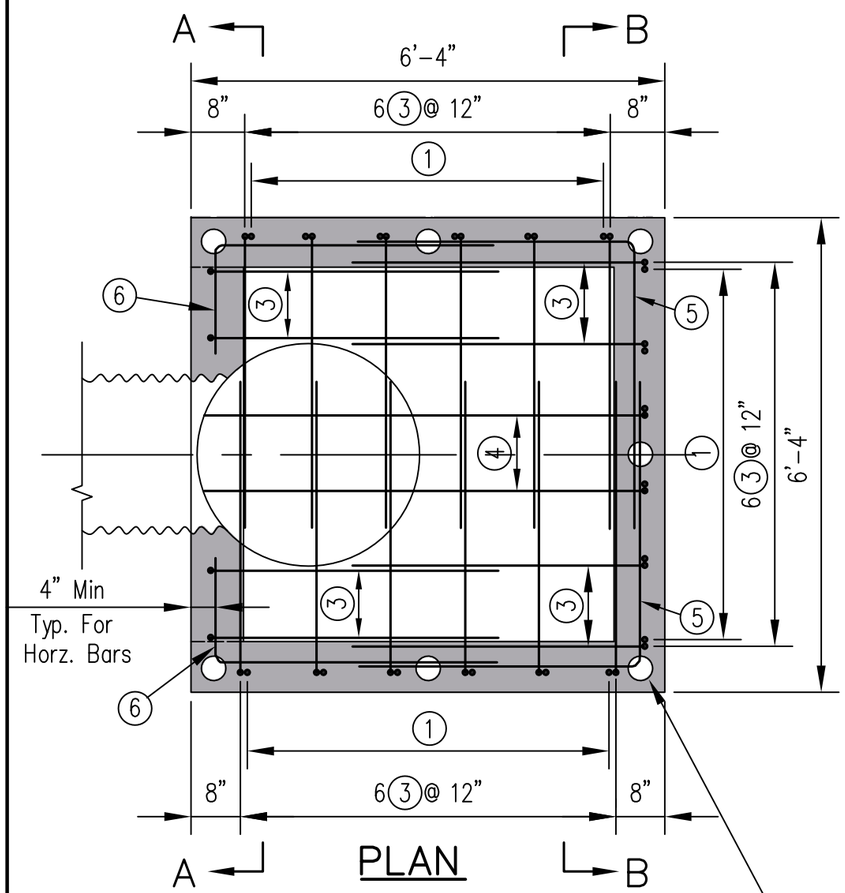

PLAN

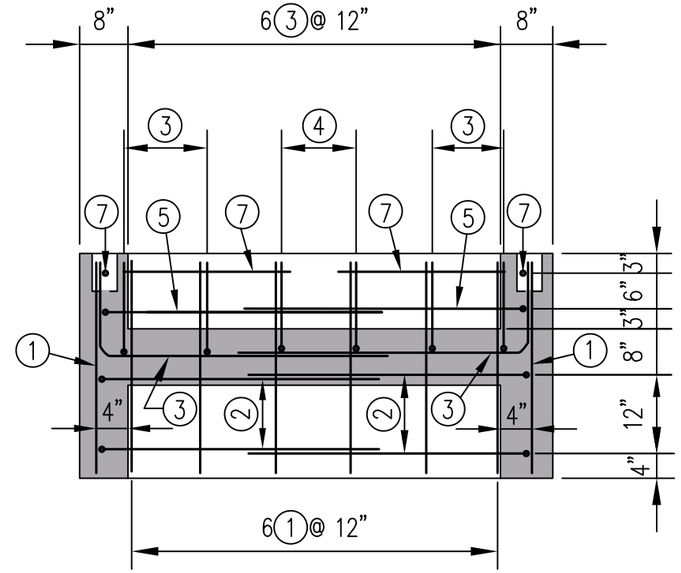

SECTION B–B

Notch each side as necessary to provide clearance for access to angle and bolts of hooded inlet frame which are located along side of pipe.

4" I.D. pipes 6" in concrete to receive vertical legs of trash rack

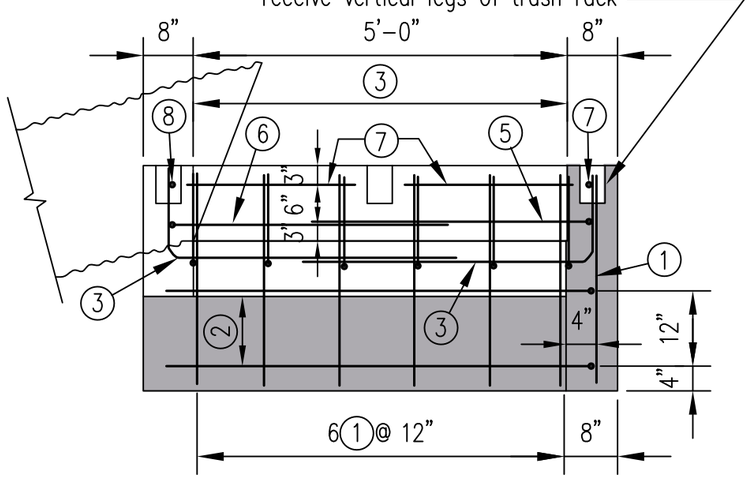

SECTION ON CENTERLINE

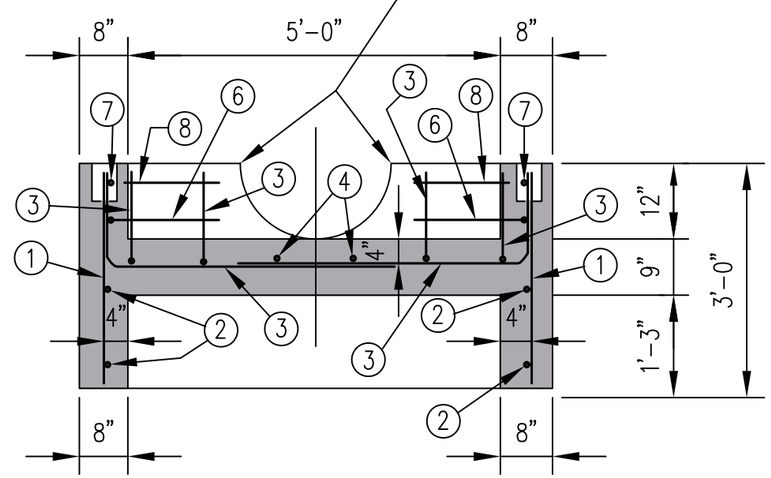

SECTION A–A

STEEL SCHEDULE

LOCATION	MARK	SIZE	QUANTITY	LENGTH	TYPE	A	B	TOTAL FT.
Footing	1	#5	18	2'-9"	1			49'-6"
Footing	2	#5	4	9'-6"	2	3'-9"	5'-9"	38'-0"
Foor & Walls	3	#5	22	5'-0"	2	1'-2"	3'-10"	110'-0"
Foor & Walls	4	#5	2	7'-0"	2	1'-2"	5'-10"	14'-0"
Walls	5	#5	2	7'-6"	2	3'-9"	3'-9"	15'-0"
Walls	6	#5	2	5'-3"	2	1'-6"	3'-9"	10'-6"
Walls	7	#5	6	2'-3"	1			13'-6"
Walls	8	#5	2	1'-3"	1			2'-6"

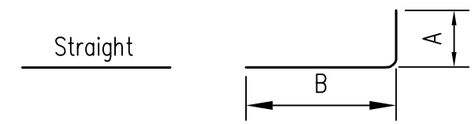

TYPE–1 TYPE–2

BAR TYPE DETAILS

QUANTITIES
Steel bar reinforcement #5 Bars
253 Lin. Ft. = 264.0 Lbs.
Volume of Conc.–Class 3000m = 2.2 Cu.Yd.

NOTES:
1. Structure is symmetrical about centerline.
2. Chamfer all exposed edges 3/4".
3. Cap bottom of 4" diameter pipe prior to placing concrete.

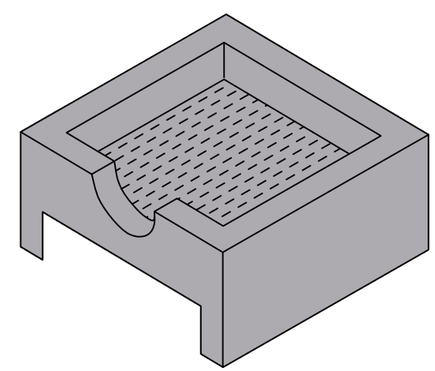

ISOMETRIC VIEW
Not To Scale

1 0 2
Scale In Feet

Designed
Redrawn M. QUINONES 9/1/14
Checked
Approved
Date

5'x5' R/C BOX INLET FOR 24" DIAMETER C.M. PIPE

United States Department of Agriculture
Natural Resources Conservation Service

File No. IL–ENG–166
Drawing No.
Page 1 of 1
Sheet of