TABLE OF DIMENSIONS AND QUANTITIES – 72" DIAMETER RISER

ⓐ rods – 3/4" dia										Baffle Plate				ⓑ rods – 3/4" dia			ⓒ rods – 5/8" dia.			ⓓ rods – 1/2" dia.		
H (In.)	R (In.)	X (in.)	Y (in.)	S	O (in.)	Total (Lg.)	No. Req'd	N (In.)	M (In.)	L	P	F	V	No. Req'd	r (In.)	Length (In.)	No. Req'd	r (In.)	Length (In.)	No. Req'd	r (In.)	Length (In.)
33	31 3/4	39 1/2	75 1/2	2 3/8	81 3/4	167 1/4"	30	17 7/8	6 3/4	160"	60"	57"	24"	3	75	472	1	36	164	2	37	233

ⓔ rods – 3/4" dia.			ⓕ rods – 5/8" dia.			Top Plate
No. Req'd	r (In.)	Length (In.)	No. Req'd	r (In.)	Length (In.)	Dia. (In.)
2	str	51	1	52	327	8

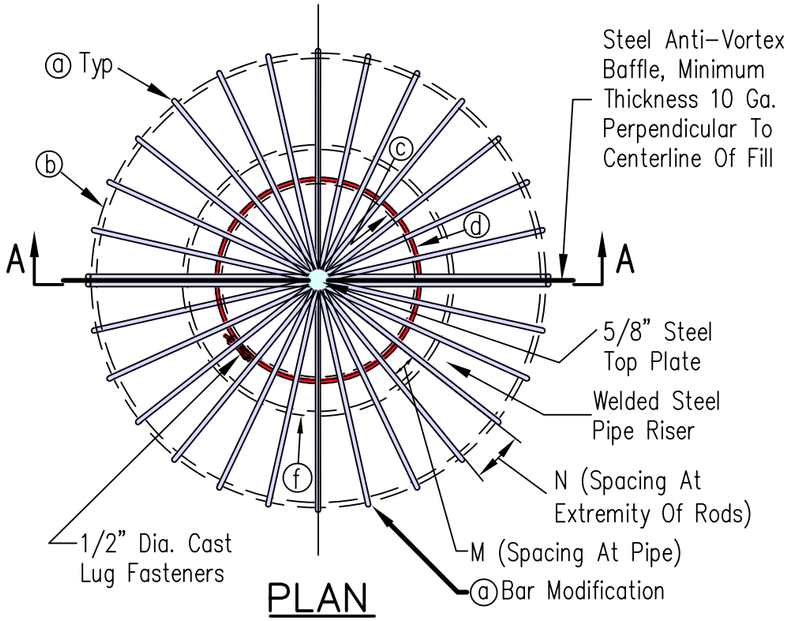

PLAN

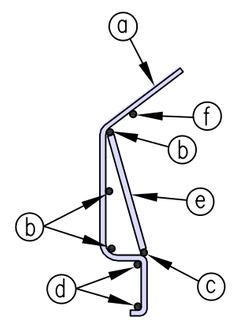

CONSTRUCTION DIAGRAM FOR ⓐ RODS

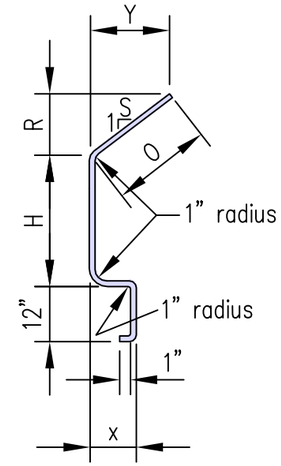

BENDING DIAGRAM FOR ⓐ RODS

FABRICATION NOTES

1. Weld 3 ⓑ, ⓒ, ⓔ and ⓕ rods to ⓐ rods and weld ⓐ rods to top plate.
2. The trash rack may be fabricated in identical halves and attached to the baffle plate with 1/2 inch diameter U bolts spaced approximately 12 inches C–C along the vertical and inclined sections of the ⓐ rods next to the baffle plate.
3. Trash rack to be fabricated from smooth round steel bars conforming to ASTM designation A–36.
4. Surface Preparation: Use solvent to remove any oil, grease or other soluble contaminants from the surface. After solvent cleaning, sand or grit blast to remove dirt, rust mill scale and other foreign material or residue.
5. Painting: Apply two coats of paint as follows. One coat of Epoxy Polyamide Primer and one coat of Epoxy Polyamide Finish.
6. Outside diameter of riser is 72 inches. Allow 1/4 inch clearance for ease of installation.

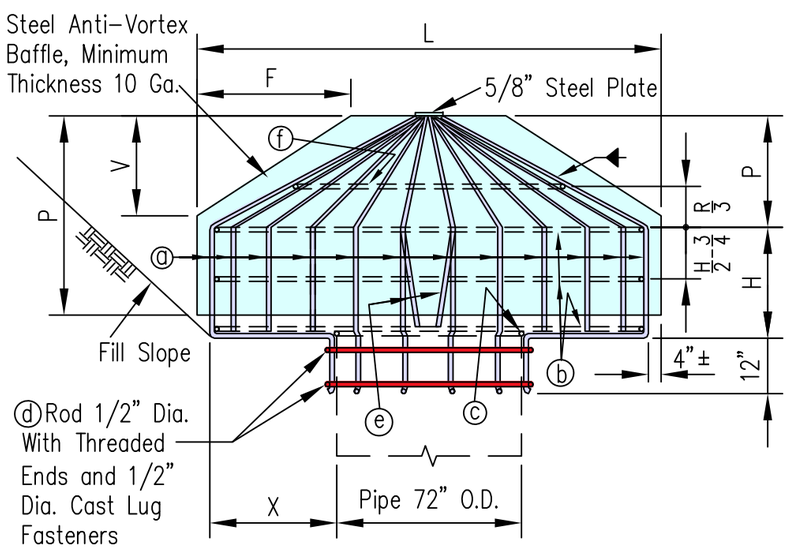

SECTIONAL ELEVATION A–A

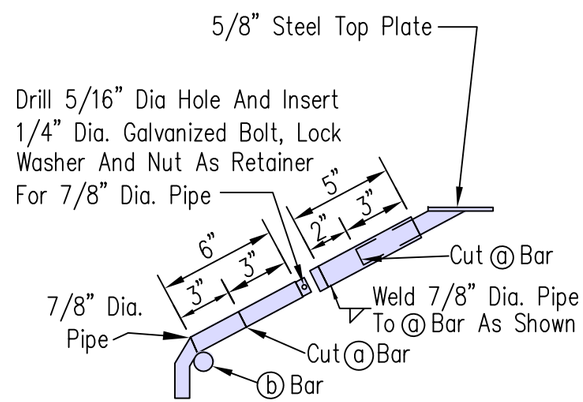

ⓐ BAR MODIFICATION

(OPTIONAL)

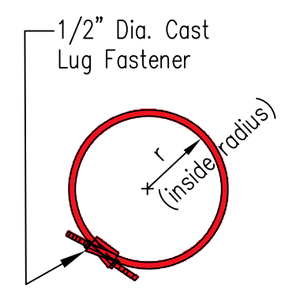

BENDING DIAGRAM FOR ⓓ RODS

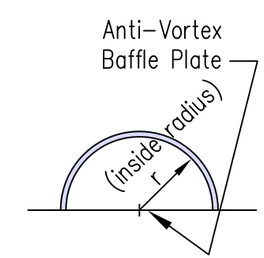

BENDING DIAGRAM FOR ⓑ, ⓒ & ⓕ RODS

Designed
Drawn M. QUINONES 4/1/16
Checked
Approved
Date

CONICAL TRASH RACK AND BAFFLE FOR 72" DIAMETER RISER

United States Department of Agriculture
Natural Resources Conservation Service

File No. II–ENG–75
Drawing No.
Page 1 of 1
Sheet of