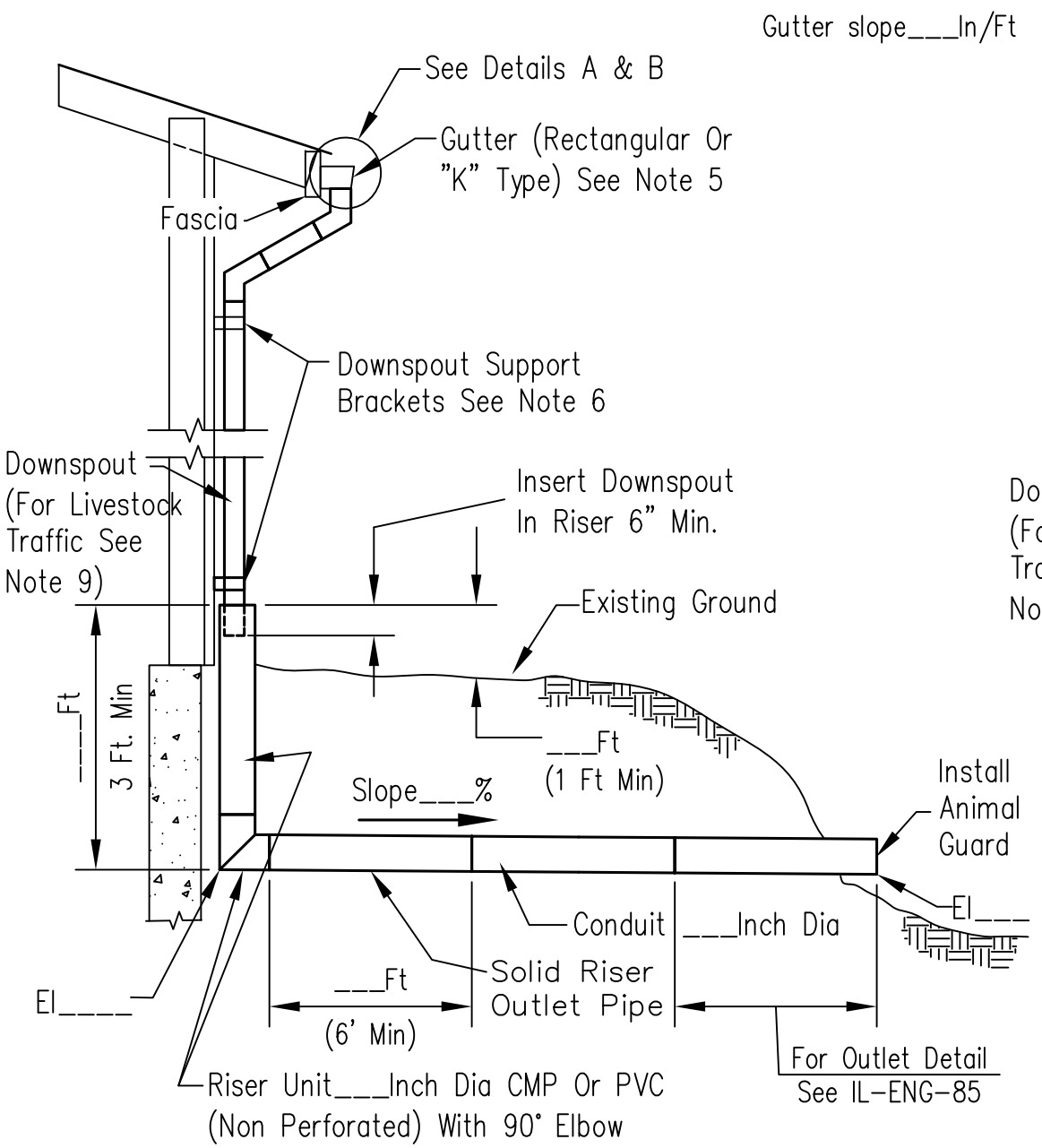

UNDERGROUND OUTLET DETAIL

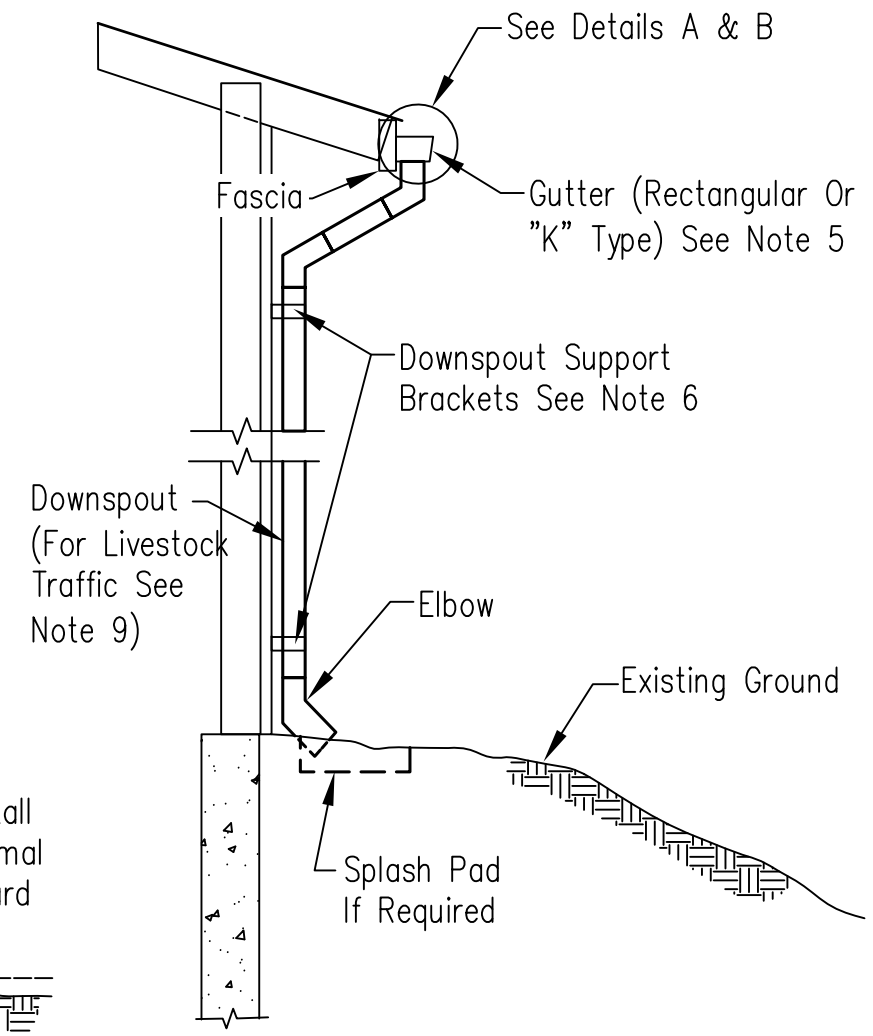

ABOVE GROUND OUTLET DETAIL

NOTES:

1. Position the gutter so the outer edge of the gutter is below the roof line projection, if possible.
2. See plan view drawing for downspout and underground outlet locations.
3. Gutter shall be corrosion resistant material of sufficient thickness to prevent flexing between supports. Aluminum gutters shall have a nominal thickness of 0.027 inches. Galvanized steel gutters shall have a minimum thickness of 28 gauge. All gutters shall have end caps.
4. Dissimilar metals shall not be in contact with each other.
5. Gutter hangers shall be located a maximum of 24 inches apart and nailed to fascia board or roof sheathing at rafter locations.
6. Downspouts shall be securely fastened at the top and bottom with support brackets and shall have intermediate supports brackets at a maximum spacing of 10 feet where not housed within a riser.
7. All gutter joints shall be made watertight by use of mastic or caulking.
8. Expansion joints shall be used on straight runs of 40 feet or more and where the gutter system is not free floating. If gutters are co-extruded follow the manufacturer's recommendations.
9. Downspout to be PVC material 6 foot above grade where livestock traffic exist.

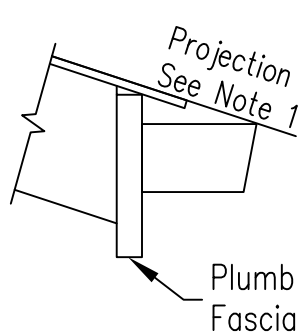

DETAIL A

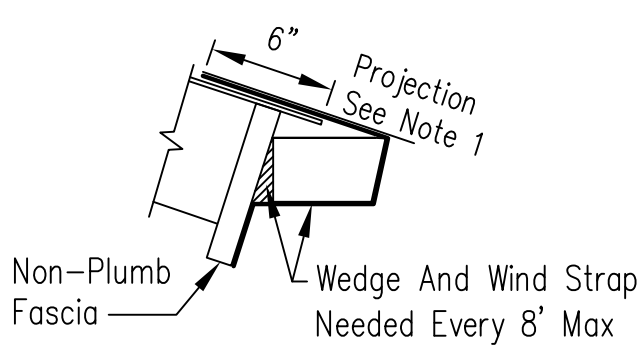

DETAIL B

ESTIMATED QUANTITIES-GUTTERS & DOWNSPOUTS		
ITEM	UNIT	QTY
Gutter__"K Style Or __"x__" Rectangular	Ft.	
End Caps	Ea.	
Gutter Hangers And Straps	Ea.	
Fascia Board And All Materials To Install	Ft.	
Downspout __" Dia	Ft.	
Downspout PVC __" Dia	Ft.	
Downspout Elbows	Ea.	
Downspout Support Brackets	Ea.	

ESTIMATED QUANTITIES-OUTLETS		
ITEM	UNIT	QTY
Riser Unit (CMP___" OR PVC___" W/ 90° Elbow	Ft.	
Solid Riser Outlet Pipe	Ft.	
Underground Outlet Conduit	Ft.	
Solid Outlet Pipe	Ft.	
Animal Guard	Ea.	
Splash Pad	Ea.	

Adapted From Wisconsin Drawing WI-408

Date
Designed
Drawn M. QUINONES 6/10
Checked
Approved

ROOF GUTTER AND DOWNSPOUT DETAILS

NRCS
Natural Resources Conservation Service
United States Department of Agriculture

File No. IL-ENG-124
Drawing No.