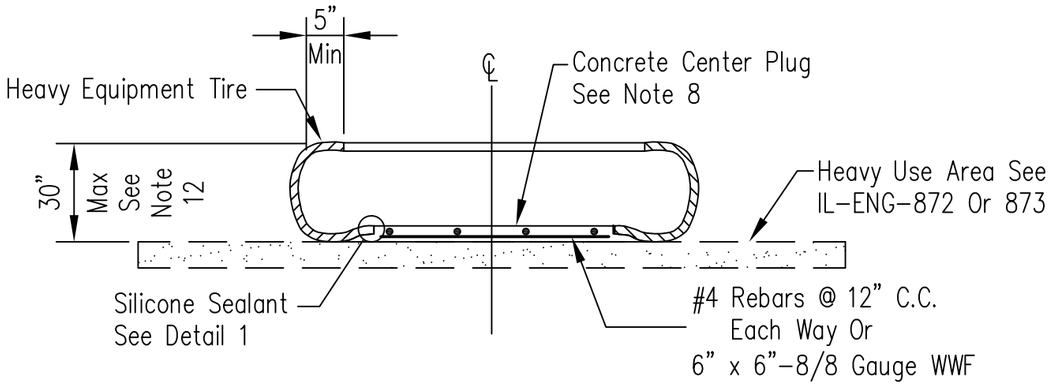

LIVESTOCK TANK ELEVATION

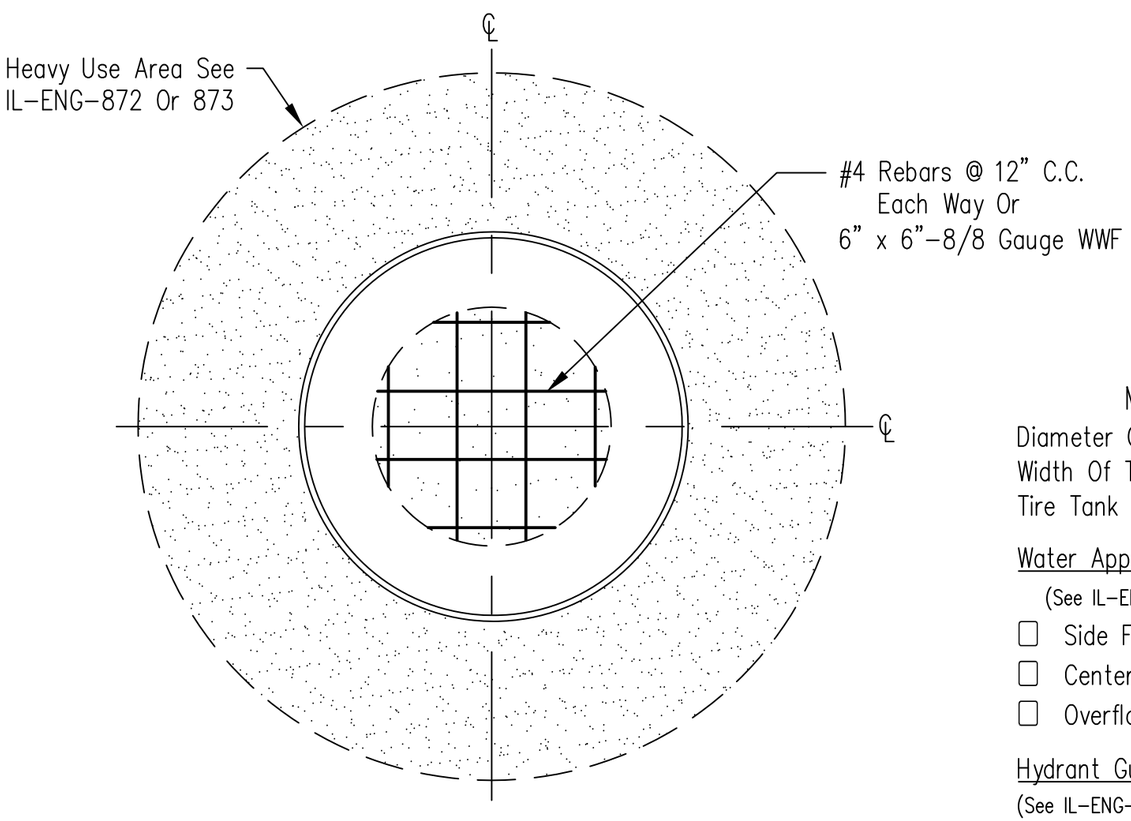

LIVESTOCK TANK PLAN

TIRE CAPACITY FOR 16" NOMINAL TIRE WIDTH	
Tire Dia.	Volume
(Ft).	(Gal.)
5	190
6	250
8	450
10	700
See Note 11	

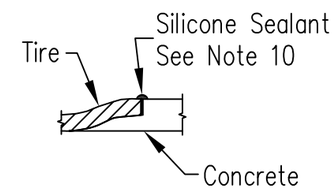

DETAIL 1

MATERIALS

Diameter Of Tire_____Ft.
Width Of Tire_____ Ft.
Tire Tank Capacity_____Gallons

Water Appurtenances

(See IL-ENG-877A)

- ☐ Side Fill Hydrant With Float Valve
- ☐ Center Fill With Float Valve
- ☐ Overflow Pipe

Hydrant Guard

(See IL-ENG-877B)

- ☐ Guard Rail For Stockwater Tank
- ☐ Guard Post For Hydrant
- ☐ Wildlife Escape Ramp
- ☐ None

NOTES:

1. Used tire inner liner must be free of cuts, rips and holes. Minimum tire thickness will be 2.0 inches. The inner most layer of belting or breaker must be intact.
2. The landowner / operator is responsible for determining the presence of toxic chemicals in the tire and taking all needed action to protect the health of the livestock.
3. Cut the top bead and part of the sidewall from the tire to form the top opening of the tank. A minimum of 5 inches of sidewall, as measured from the lugs of the tire, must remain after the cut is made.
4. If a center fill hydrant is planned, install the water supply (and overflow line, if applicable) prior to tire placement. See Il-ENG-877A for details.
5. The concrete center plug must be constructed on a firm, well compacted foundation. See IL-ENG-871 circular pad for details.
6. Rebar or welded wire fabric (WWF) will be cut to a length which will not extend past the rim bead or 3 inches from the outside edge of the concrete center plug, which ever is less.
7. Synthetic fiber reinforcement at the rate of 1.5 pounds per cubic yard of concrete may be used in place of the rebar or welded wire fabric.
8. Set the concrete center plug flush with the top of the rim hole in the center of the tire, and fill the cavity between the tire and the compacted heavy use area foundation. Minimum thickness of concrete is 6 inches.
9. Immediately after placing concrete for the center plug, fill the tire with water to a 1.5 inch depth above concrete to aide in the curing of concrete. Care should be taken not to disturb the concrete while water is being added to the tire.
10. Apply silicone sealant to concrete/tire joint and around any center fill or overflow lines to ensure water tight seal.
11. Volume of the tire tank is to be determined using actual tire diameter and width, less the volume of the center plug.
12. Maximum height of stockwater tank (tire width) is 30 inches for cattle or 12 inches for sheep and goats. Larger tire widths may be used if the tank is buried below grade to achieve proper tank height.

Date
Designed
Drawn M. QUINONES 9/1/15
Checked
Approved

RUBBER TIRE STOCKWATER TANK

United States Department of Agriculture
Natural Resources Conservation Service

File No.
IL-ENG-876
Drawing No.
Page 1 of 1
Sheet of