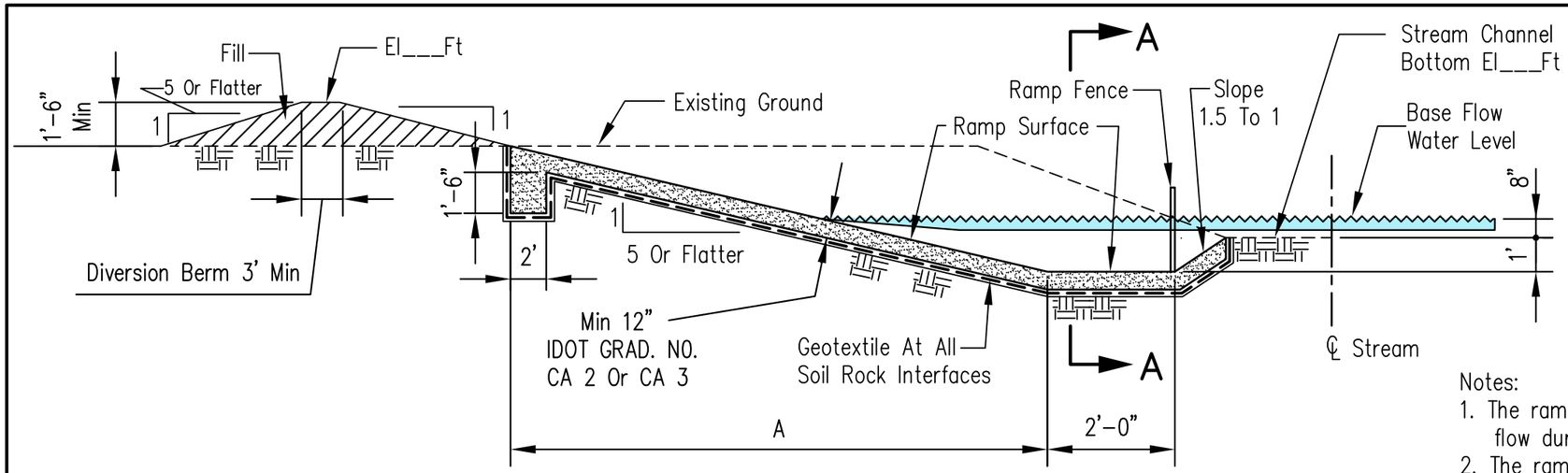

TYPICAL CROSS SECTION

ESTIMATED QUANTITIES	
Excavation	Cu.Yd.
Geotextile	Sq.Yd.
Coarse Aggregate	Tons
Ramp Fencing	Feet
Seeding	Acres

Notes:

1. The ramp should be used only on streams with a base flow during a dry season.
2. The ramp should be used only on stable stream channels not subject to channel downcutting.
3. Surfacing material shall be compacted so that the entire surface is traversed by not less than one tread track of the load hauling equipment.
4. Diversion berm shall be constructed to direct surface flow away from excavated ramp, as directed by the engineer.
5. All disturbed areas not covered by gravel shall be seeded in accordance with Critical Area Planting Standard (Practice Code 342).
6. Excavated material shall be removed from site, used for diversion berm, or placed at least 12 feet from top edge of back slope and spread so that the height does not exceed 1 foot. The spoil material shall drain freely.
7. Geotextile (non-woven, needle punched) Minimum criteria:
   Grab tensile strength (lb) ASTM D 4632_____202
   Elongation at failure (%) ASTM D 4632_____≥ 50
   Trapezoidal tear strength (lb) ASTM D 4533_____79
   Puncture strength (lb) ASTM D 6241_____433
   Ultraviolet light (% retained strength) ASTM D 4355_____
   _____min 50
   Apparent opening size (AOS) ASTM D 4751_____
   max 0.22 mm (US sieve size70)
   Permittivity sec^{-1} ASTM D 4491_____min 0.70
8. Any geotextile splices shall overlap a minimum of 18 inches, with upstream or upslope geotextile overlapping the abutting downslope geotextile.

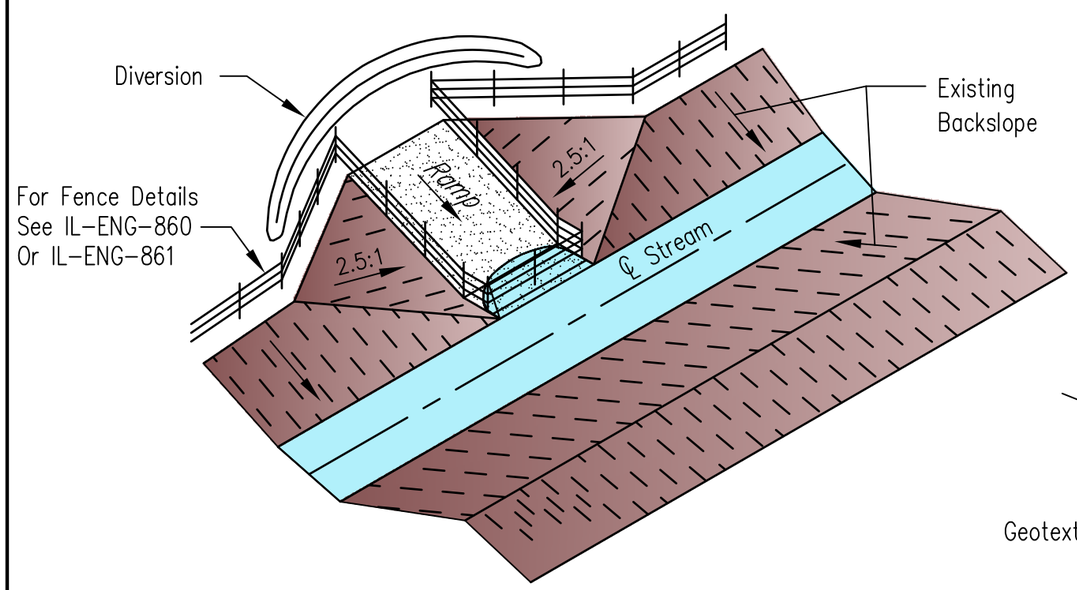

ISOMETRIC VIEW

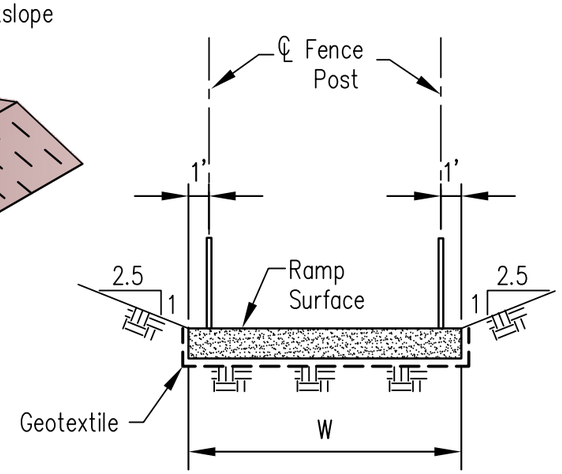

SECTION A-A

DIMENSIONS
A = ____Ft
W = ____Ft

Landowner		Location	

Designed ____ Date ____
Drawn M. QUINONES 2/1/17
Checked ____
Approved ____

STREAMBANK WATERING RAMP

United States Department of Agriculture
Natural Resources Conservation Service

File No. IL-ENG-862
Drawing No.
Page 1 of 1
Sheet of