PIPE FLOW CHARTS

HOODED INLET

The capacity of hood inlet pipes under various heads and length of pipe are given on Table 1 which covers corrugated metal pipe. Table 2 covers welded steel pipe.

The values in Tables 1 and 2 were derived from from the formula:

$$Q = a\sqrt{\frac{2\,g\,H}{1 + K_e + K_m + K_p\ L}}$$

Where
- H = total available head, ft.
- g = acceleration of gravity 32.16 ft/sec^2
- K_e = entrance loss coefficient
- K_m = miterbend loss coefficient
- K_p = pipe-friction loss coefficient (Page 15, T. R. #3)
- Q = discharge (cfs)
- a = cross sectional area of culvert, ft^2
- L = length of conduit, ft.
- h = pipe invert to crest of emergency spillway

Values of S_n (neutral slope) are not shown in tables.
Values of Q (cfs) in the tables reflect slopes equal to or greater than S_n

$$S_n = K_p \frac{(V)^2}{2_g}$$

When using these tables, it must be remembered that for a certain length of pipe with a certain head and a certain amount of Q (cfs) the pipe will have a minimum S_n in order to make the pipe flow full. Discharges that would cause the pipe to have an S of 36% or greater were eliminated.

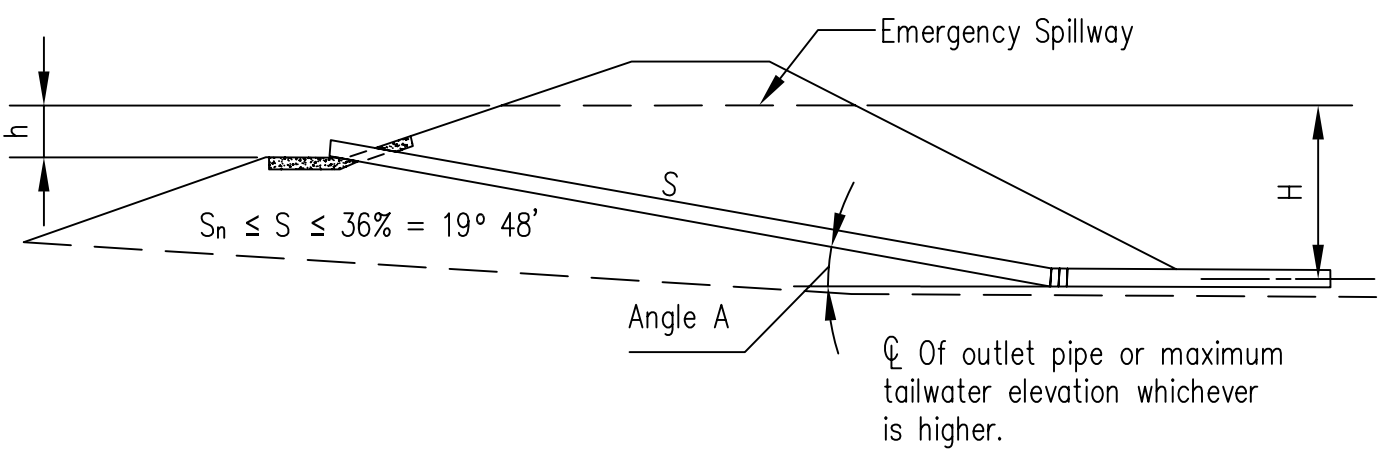

HEAD DISCHARGE TABLE FOR CORRUGATED METAL PIPE (ANNULAR) HOOD INLETS FULL FLOW CONDITIONS (For Dams)

Head In Ft.		4	6	8	10	12	14	16	18	20	22	24	26	28	30
Barrel		Q (Discharge In CFS)													
Dia. In.	Lg. Ft.														
6	40	0.9	1.0	1.2	1.3	1.5	1.6	1.7	1.8	1.9	2.0	2.1	2.2	2.2	2.3
	50	0.8	0.9	1.1	1.2	1.3	1.4	1.5	1.6	1.7	1.8	1.9	2.0	2.0	2.1
	60	0.7	0.9	1.0	1.1	1.2	1.3	1.4	1.5	1.6	1.7	1.7	1.8	1.9	2.0
	70	0.7	0.8	0.9	1.0	1.1	1.2	1.3	1.4	1.5	1.6	1.6	1.7	1.8	1.8
	80	0.6	0.8	0.9	1.0	1.1	1.2	1.2	1.3	1.4	1.5	1.5	1.6	1.7	1.7
	90	0.6	0.7	0.8	0.9	1.0	1.1	1.2	1.3	1.3	1.4	1.5	1.5	1.6	1.6
	100	0.6	0.7	0.8	0.9	1.0	1.1	1.1	1.2	1.3	1.3	1.4	1.4	1.5	1.5
	110	0.5	0.7	0.8	0.8	0.9	1.0	1.1	1.1	1.2	1.3	1.3	1.4	1.4	1.5
	120	0.5	0.6	0.7	0.8	0.9	1.0	1.0	1.1	1.2	1.2	1.3	1.3	1.4	1.4
	130	0.5	0.6	0.7	0.8	0.9	0.9	1.0	1.1	1.1	1.2	1.2	1.3	1.3	1.4
	140	0.5	0.6	0.7	0.8	0.8	0.9	1.0	1.0	1.1	1.1	1.2	1.2	1.3	1.3
	150	0.5	0.6	0.7	0.7	0.8	0.9	0.9	1.0	1.0	1.1	1.1	1.2	1.2	1.3
8	40	1.8	2.2	2.5	2.8	3.1	3.3	3.5	3.8	4.0	4.2	4.3	4.5	4.7	4.9
	50	1.6	2.0	2.3	2.6	2.8	3.0	3.2	3.4	3.6	3.8	4.0	4.1	4.3	4.4
	60	1.5	1.8	2.1	2.4	2.6	2.8	3.0	3.2	3.4	3.5	3.7	3.8	4.0	4.1
	70	1.4	1.7	2.0	2.2	2.4	2.6	2.8	3.0	3.1	3.3	3.4	3.6	3.7	3.8
	80	1.3	1.6	1.9	2.1	2.3	2.5	2.6	2.8	2.9	3.1	3.2	3.4	3.5	3.6
	90	1.3	1.5	1.8	2.0	2.2	2.3	2.5	2.7	2.8	2.9	3.1	3.2	3.3	3.4
	100	1.2	1.5	1.7	1.9	2.1	2.2	2.4	2.5	2.7	2.8	2.9	3.0	3.2	3.3
	110	1.1	1.4	1.6	1.8	2.0	2.1	2.3	2.4	2.6	2.7	2.8	2.9	3.0	3.1
	120	1.1	1.4	1.6	1.7	1.9	2.1	2.2	2.3	2.5	2.6	2.7	2.8	2.9	3.0
	130	1.1	1.3	1.5	1.7	1.8	2.0	2.1	2.2	2.4	2.5	2.6	2.7	2.8	2.9
	140	1.0	1.3	1.5	1.6	1.8	1.9	2.1	2.2	2.3	2.4	2.5	2.6	2.7	2.8
	150	1.0	1.2	1.4	1.6	1.7	1.9	2.0	2.1	2.2	2.3	2.4	2.5	2.6	2.7
10	40	3.1	3.8	4.4	4.9	5.4	5.8	6.2	6.6	6.9	7.3	7.6	7.9	8.2	8.5
	50	2.9	3.5	4.0	4.5	4.9	5.3	5.7	6.1	6.4	6.7	7.0	7.3	7.6	7.8
	60	2.6	3.2	3.7	4.2	4.6	5.0	5.3	5.6	5.9	6.2	6.5	6.8	7.0	7.3
	70	2.5	3.0	3.5	3.9	4.3	4.6	5.0	5.3	5.6	5.8	6.1	6.3	6.6	6.8
	80	2.4	2.9	3.3	3.7	4.1	4.4	4.7	5.0	5.3	5.5	5.8	6.0	6.2	6.5
	90	2.2	2.7	3.2	3.5	3.9	4.2	4.5	4.7	5.0	5.2	5.5	5.7	5.9	6.1
	100	2.1	'												
	110														
	120														
	130														
	140														
	150		_	2.5	2.8	3.1	3.3	3.6	3.8	4.0	4.2	4.4	4.5	4.7	4.9

Discharge capacities computed from formula $Q = a\sqrt{\dfrac{2gH}{1 + K_e + Km + KpL}}$
with n = 0.025 and Ke + Km as 1.0

Table 1

HEAD DISCHARGE TABLES FOR CORRUGATED METAL PIPE HOOD INLETS
FULL PIPE FLOW CONDITIONS
(For Dams)

Head In Ft.		4	6	8	10	12	14	16	18	20	22	24	26	28	30
Barrel		Q (Discharge In CFS)													
Dia. In.	Lg. Ft.														
12	40	4.88	5.98	6.90	7.72	8.45	9.13	9.76	10.4	10.9	11.4	–	–	–	–
	50	4.52	5.53	6.39	7.15	7.83	8.46	9.04	9.59	10.1	10.6	11.1	11.5	–	–
	60	4.20	5.14	5.94	6.64	7.27	7.86	8.40	8.91	9.40	9.85	10.3	10.7	11.1	11.5
	70	3.96	4.85	5.60	6.26	6.86	7.41	7.92	8.40	8.85	9.29	9.70	10.1	10.5	10.8
	80	3.76	4.60	5.32	5.94	6.51	7.03	7.52	7.98	8.41	8.82	9.21	9.59	9.95	10.3
	90	3.58	4.38	5.06	5.66	6.20	6.70	7.16	7.59	8.00	8.40	8.77	9.13	9.47	9.80
	100	3.42	4.19	4.84	5.41	5.92	6.40	6.84	7.26	7.65	8.02	8.38	8.72	9.05	9.37
	110	3.28	4.02	4.64	5.19	5.68	6.14	6.56	6.96	7.33	7.69	8.03	8.36	8.68	8.98
	120	3.16	3.87	4.47	5.00	5.47	5.91	6.32	6.70	7.07	7.41	7.74	8.06	8.36	8.65
	130	3.04	3.72	4.30	4.81	5.27	5.69	6.08	6.45	6.80	7.13	7.45	7.75	8.04	8.33
	140	2.96	3.62	4.19	4.68	5.13	5.54	5.92	6.28	6.62	6.94	7.25	7.55	7.83	8.11
	150	2.86	3.50	4.04	4.52	4.95	5.35	5.72	6.07	6.39	6.71	7.01	7.29	7.57	7.83
	160	2.78	3.40	3.93	4.40	4.81	5.20	5.56	5.90	6.22	6.52	6.81	7.09	7.36	7.61
15	40	8.46	10.4	12.0	13.4	14.7	15.8	16.9	17.9	18.9	19.8	–	–	–	–
	50	7.86	9.62	11.1	12.4	13.6	14.7	15.7	16.7	17.6	18.4	19.3	20.0	–	–
	60	7.38	9.03	10.4	11.7	12.8	13.8	14.8	15.7	16.5	17.3	18.1	18.8	19.5	–
	70	6.97	8.53	9.85	11.0	12.1	13.0	13.9	14.8	15.6	16.3	17.1	17.8	18.5	19.1
	80	6.62	8.11	9.36	10.5	11.5	12.4	13.2	14.0	14.8	15.5	16.2	16.9	17.5	18.1
	90	6.32	7.74	8.94	10.0	11.0	11.8	12.6	13.4	14.1	14.8	15.5	16.1	16.7	17.3
	100	6.06	7.42	8.57	9.60	10.5	11.3	12.1	12.9	13.6	14.3	14.9	15.5	16.0	16.6
	110	5.83	7.14	8.24	9.20	10.1	10.9	11.7	12.4	13.0	13.7	14.3	14.9	15.4	16.0
	120	5.62	6.88	7.95	8.89	9.74	10.5	11.2	11.9	12.6	13.2	13.8	14.3	14.9	15.4
	130	5.43	6.65	7.68	8.59	9.41	10.2	10.9	11.3	12.2	12.7	13.3	13.9	14.4	15.0
	140	5.26	6.45	7.44	8.32	9.12	9.85	10.5	11.2	11.8	12.3	12.9	13.4	13.9	14.4
	150	5.11	6.26	7.23	8.08	8.85	9.56	10.2	10.9	11.4	12.0	12.5	13.0	13.5	14.0
	160	4.97	6.09	7.03	7.86	8.61	9.30	9.94	10.5	11.1	11.7	12.2	12.7	13.2	13.6
18	40	13.1	16.0	18.5	20.7	22.7	24.5	26.2	27.8	29.3	30.7	32.1	–	–	–
	50	12.2	15.0	17.3	19.4	21.2	22.9	24.5	26.0	27.4	28.7	30.0	31.2	32.4	–
	60	11.5	14.1	16.3	18.3	20.0	21.6	23.1	24.5	25.8	27.1	28.3	29.4	30.6	31.6
	70	11.0	13.4	15.5	17.3	19.0	20.5	21.9	23.2	24.5	25.7	26.8	27.9	29.0	30.0
	80	10.4	12.8	14.8	16.5	18.1	19.5	20.9	22.2	23.4	24.5	25.6	26.6	27.6	28.6
	90	10.0	12.3	14.2	15.8	17.3	18.7	20.0	21.2	22.4	23.5	24.5	25.5	26.5	27.4
	100	9.60	11.8	13.6	15.2	16.6	18.0	19.2	20.4	21.5	22.5	23.5	24.5	25.4	26.3
	110	9.25	11.3	13.1	14.6	16.0	17.3	18.5	19.7	20.7	21.7	22.7	23.6	24.5	25.3
	120	8.93	10.9	12.6	14.1	15.5	16.7	17.9	20.0	21.0	21.9	21.9	22.8	23.6	24.5
	130	8.65	10.6	12.2	13.7	15.0	16.2	17.3	18.4	19.3	20.3	21.2	22.1	22.9	23.7
	140	8.39	10.3	11.9	13.3	14.5	15.7	16.8	17.8	18.8	19.7	20.6	21.4	22.2	23.0
	150	8.16	9.99	11.5	12.9	14.1	15.3	16.3	17.3	18.2	19.1	20.0	20.8	21.6	22.3
	160	7.94	9.72	11.2	12.6	13.8	14.9	15.9	16.8	17.8	18.6	19.5	20.3	21.0	21.7

Weir Flow Controls; "h" less than 1.4D

Diameter = 12"		Diameter = 15"		Diameter = 18"	
h	Q	h	Q	h	Q
0.20	0.16	0.80	1.56	0.25	0.28	1.00	2.73	0.30	0.44	1.20	4.30
0.40	0.46	1.00	2.20	0.50	0.80	1.25	3.84	0.60	1.27	1.50	6.06
0.60	0.88	1.10	2.50	0.75	1.54	1.38	4.37	0.90	2.43	1.65	6.89

Table 1
IL-EFM Notice 1
3/85

HEAD DISCHARGE TABLES FOR CORRUGATED METAL PIPE HOOD INLETS
FULL PIPE FLOW CONDITIONS
(For Dams)

Head In Ft.		4	6	8	10	12	14	16	18	20	22	24	26	28	30
Barrel		Q (Discharge In CFS)													
Dia. In.	Lg. Ft.														
21	40	18.8	23.1	26.6	29.8	32.6	35.3	37.7	40.0	42.1	44.2	46.2	48.0	–	–
	50	17.7	21.7	25.1	28.0	30.7	33.2	35.5	37.6	39.7	41.6	43.4	45.2	46.9	48.6
	60	16.8	20.5	23.7	26.5	29.1	31.4	33.5	35.6	37.5	39.3	41.1	42.8	44.4	45.9
	70	16.0	19.6	22.6	25.3	27.7	29.9	31.8	33.7	35.8	37.5	39.2	40.8	42.3	43.8
	80	15.3	18.7	21.6	24.2	26.5	28.6	30.6	32.4	34.2	35.8	37.4	39.0	40.4	41.8
	90	14.7	17.9	20.7	23.2	25.4	27.4	29.3	31.1	32.8	34.4	35.9	37.4	38.8	40.1
	100	14.1	17.3	20.0	22.3	24.5	26.4	28.2	30.0	31.6	33.1	34.6	36.0	37.4	38.7
	110	13.6	16.7	19.3	21.6	23.6	25.5	27.3	28.9	30.5	32.0	33.4	34.8	36.1	37.4
	120	13.2	16.2	18.7	20.9	22.9	24.7	26.4	28.0	29.5	31.0	32.3	33.7	34.9	36.2
	130	12.8	15.6	18.1	20.2	22.1	23.9	25.5	27.1	28.6	30.0	31.3	32.6	33.8	35.0
	140	12.4	15.2	17.6	19.7	21.5	23.3	24.9	26.4	27.8	29.2	30.5	31.7	32.9	34.1
	150	12.1	14.8	17.1	19.1	21.0	22.6	24.2	25.7	27.1	28.4	29.6	30.8	32.0	33.1
	160	11.8	14.4	16.6	18.6	20.4	22.0	23.5	24.9	26.3	27.6	28.8	30.0	31.1	32.2
24	40	25.7	31.5	36.4	40.7	44.6	48.1	51.4	54.6	57.5	60.3	63.0	65.6	68.1	70.1
	50	24.3	29.8	34.4	38.4	42.1	45.5	48.6	51.6	54.3	57.0	59.5	62.0	64.2	66.6
	60	23.1	28.3	32.7	36.5	40.0	43.2	46.2	49.0	51.7	54.2	56.6	58.9	61.1	63.3
	70	22.0	27.0	31.2	34.8	38.2	41.2	44.1	46.8	49.3	51.7	54.0	56.2	58.2	60.4
	80	21.1	25.8	29.8	33.4	36.5	39.5	42.2	44.8	47.2	49.5	51.7	53.8	55.7	57.8
	90	20.3	24.9	28.8	32.2	35.2	38.1	40.7	43.2	45.5	47.7	49.8	51.9	53.7	55.7
	100	19.6	24.0	27.7	31.0	33.9	36.7	39.2	41.6	43.8	45.9	48.0	50.0	51.8	53.7
	110	19.0	23.2	26.8	30.0	32.8	35.5	37.9	40.2	42.4	44.5	46.5	48.4	50.1	51.9
	120	18.4	22.5	26.0	29.1	31.9	34.4	36.8	39.0	41.1	43.1	45.1	46.9	48.6	50.4
	130	17.8	21.8	25.2	28.2	30.9	33.4	35.7	37.8	39.9	41.8	43.7	45.5	47.1	48.8
	140	17.3	21.2	24.5	27.4	30.0	32.4	34.7	36.8	38.8	40.6	42.5	44.2	45.8	47.5
	150	16.9	20.7	23.9	26.7	29.3	31.6	33.8	35.8	37.8	39.6	41.4	43.1	44.6	46.3
	160	16.5	20.1	23.3	26.0	28.5	30.8	32.9	34.9	36.8	38.6	40.3	41.9	43.5	45.1
30	40	42.9	52.5	60.7	67.8	74.3	80.3	85.8	91.1	96.0	100.6	105.1	109.4	113.6	117.6
	50	41.0	50.1	57.9	64.7	70.9	76.6	81.9	86.9	91.6	96.0	100.3	104.4	108.4	112.1
	60	39.2	48.0	55.4	61.9	67.9	73.3	78.4	83.1	87.6	91.9	96.0	99.9	103.7	107.3
	70	37.6	46.1	53.2	59.5	65.1	70.4	75.2	79.8	84.1	88.2	92.1	95.9	99.5	103.0
	80	36.2	44.4	51.2	57.3	62.8	67.8	72.4	76.9	81.0	85.0	88.8	92.4	95.9	99.2
	90	35.1	42.9	49.6	55.4	60.7	65.6	70.1	74.4	78.4	82.2	85.9	89.4	92.8	96.0
	100	33.9	41.5	47.9	53.6	58.7	63.4	67.8	71.9	75.8	79.4	83.0	86.4	89.6	92.8
	110	32.8	40.2	46.4	51.9	56.8	61.4	65.6	69.6	73.3	76.9	80.3	83.6	86.8	89.8
	120	31.9	39.1	45.1	50.5	55.3	59.7	63.8	67.7	71.4	74.8	78.2	81.4	84.4	87.4
	130	31.1	38.0	43.9	49.1	53.7	58.1	62.1	65.8	69.4	72.8	76.0	79.1	82.1	85.0
	140	30.2	37.0	42.8	47.8	52.4	56.6	60.5	64.2	67.6	70.9	74.1	77.1	80.0	82.8
	150	29.7	36.3	41.9	46.9	51.4	55.5	59.3	62.9	66.3	69.5	72.6	75.6	78.5	81.2
	160	28.9	35.4	40.8	45.6	50.0	54.0	57.7	61.2	64.6	67.7	70.7	73.6	76.4	79.1

Weir Flow Controls; "h" less than 1.4D

Diameter = 21"		Diameter = 24"		Diameter = 30"	
h	Q	h	Q	h	Q
0.35	0.60	0.40	0.90	0.50	1.60
0.70	1.80	0.80	2.60	1.00	4.70
1.05	3.50	1.20	5.00	1.50	9.00
1.40	6.30	1.60	8.80	2.00	1.59
1.75	8.80	2.00	12.40	2.50	22.50
1.93	10.00	2.30	14.10	2.80	25.60

Table 1
IL-EFM Notice 1
3/85

HEAD DISCHARGE TABLE FOR WELDED STEEL PIPE HOOD INLETS
FULL PIPE FLOW CONDITIONS
(For Dams)

Head In Ft.		4	6	8	10	12	14	16	18	20	22	24	26	28	30
Barrel		Q (Discharge In CFS)													
Dia. In.	Lg. Ft.														
6	40	1.5	1.8	2.1	2.3	2.5	2.7	2.9	3.1	3.2	3.4	3.6	3.7	3.8	4.0
	50	1.4	1.7	1.9	2.2	2.4	2.5	2.7	2.9	3.0	3.2	3.3	3.5	3.6	3.7
	60	1.3	1.6	1.8	2.0	2.2	2.4	2.6	2.7	2.9	3.0	3.1	3.3	3.4	3.5
	70	1.2	1.5	1.7	1.9	2.1	2.3	2.4	2.6	2.7	2.9	3.0	3.1	3.2	3.3
	80	1.2	1.4	1.6	1.8	2.0	2.2	2.3	2.5	2.6	2.7	2.8	3.0	3.1	3.2
	90	1.1	1.4	1.6	1.3	1.9	2.1	2.2	2.4	2.5	2.6	2.7	2.8	2.9	3.0
	100	1.1	1.3	1.5	1.7	1.8	2.0	2.1	2.3	2.4	2.5	2.6	2.7	2.8	2.9
	110	1.0	1.3	1.5	1.6	1.8	1.9	2.1	2.2	2.3	2.4	2.5	2.6	2.7	2.8
	120	1.0	1.2	1.4	1.6	1.7	1.9	2.0	2.1	2.2	2.3	2.4	2.5	2.6	2.7
	130	1.0	1.2	1.4	1.5	1.7	1.8	1.9	2.0	2.2	2.3	2.4	2.5	2.5	2.6
	140	0.9	1.1	1.3	1.5	1.6	1.7	1.9	2.0	2.1	2.2	2.3	2.4	2.5	2.6
	150	0.9	1.1	1.3	1.4	1.6	1.7	1.8	1.9	2.0	2.1	2.2	2.3	2.4	2.5
8	40	2.8	3.5	4.0	4.5	5.0	5.4	5.7	6.1	6.4	6.7	7.0	7.3	7.6	7.8
	50	2.7	3.3	3.8	4.3	4.7	5.1	5.4	5.7	6.0	6.3	6.6	6.9	7.1	7.4
	60	2.6	3.1	3.6	4.1	4.4	4.8	5.1	5.4	5.7	6.0	6.3	6.5	6.8	7.0
	70	2.5	3.0	3.5	3.9	4.2	4.6	4.9	5.2	5.5	5.8	6.0	6.3	6.5	6.7
	80	2.4	2.9	3.3	3.7	4.1	4.4	4.7	5.0	5.3	5.5	5.8	6.0	6.2	6.4
	90	2.3	2.8	3.2	3.6	3.9	4.2	4.5	4.8	5.1	5.3	5.5	5.8	6.0	6.2
	100	2.2	2.7	3.1	3.5	3.8	4.0	4.4	4.6	4.9	5.1	5.4	5.6	5.8	6.0
	110	2.1	2.6	3.0	3.3	3.6	3.9	4.2	4.5	4.7	4.9	5.2	5.4	5.6	5.8
	120	2.0	2.5	2.9	3.2	3.5	3.8	4.1	4.3	4.6	4.8	5.0	5.2	5.4	5.6
	130	2.0	2.4	2.8	3.1	3.4	3.7	4.0	4.2	4.4	4.7	4.9	5.1	5.3	5.5
	140	1.9	2.4	2.7	3.1	3.3	3.6	3.9	4.1	4.3	4.5	4.7	4.9	5.1	5.3
	150	1.9	2.3	2.7	3.0	3.2	3.5	3.8	4.0	4.2	4.4	4.6	4.8	5.0	5.1
10	40	4.8	5.8	6.8	7.5	8.3	8.9	9.5	10.1	10.7	11.2	11.7	12.2	12.6	13.1
	50	4.5	5.6	6.4	7.2	7.9	8.5	9.1	9.6	10.2	10.7	11.1	11.6	12.0	12.5
	60	4.4	5.3	6.2	6.9	7.5	8.1	8.7	9.2	9.7	10.2	10.7	11.1	11.5	11.9
	70	4.2	5.1	5.9	6.6	7.2	7.8	8.3	8.8	9.3	9.8	10.2	10.6	11.0	11.4
	80	4.0	4.9	5.7	6.4	7.0	7.5	8.0	8.5	9.0	9.4	9.9	10.3	10.6	11.0
	90	3.9	4.8	5.5	6.1	6.7	7.3	7.8	8.3	8.7	9.1	9.5	9.9	10.3	10.7
	100	3.8	4.6	5.3	5.9	6.5	7.0	7.5	8.0	8.4	8.8	9.2	9.6	9.9	10.3
	110	3.7	4.5	5.2	5.8	6.3	6.8	7.3	7.7	8.2	8.6	8.9	9.3	9.7	10.0
	120	3.5	4.3	5.0	5.6	6.1	6.6	7.1	7.5	7.9	8.3	8.7	9.0	9.4	9.7
	130	3.5	4.2	4.9	5.5	6.0	6.5	6.9	7.3	7.7	8.1	8.5	8.8	9.1	9.5
	140	3.4	4.1	4.8	5.3	5.8	6.3	6.7	7.1	7.5	7.9	8.3	8.6	8.9	9.2
	150	3.3	4.0	4.6	5.2	5.7	6.1	6.6	7.0	7.3	7.7	8.0	8.4	8.7	9.0

Discharge capacities computed from formula $Q = a\sqrt{\dfrac{2gH}{1 + K_e + Km + KpL}}$
with n = 0.012 and Ke + Km as 1.0

Table 2

HEAD DISCHARGE TABLES FOR WELDED STEEL PIPE HOOD INLETS
FULL PIPE FLOW CONDITIONS
(For Dams)

Head In Ft.		4	6	8	10	12	14	16	18	20	22	24	26	28	30
Barrel		Q (Discharge In CFS)													
Dia. In.	Lg. Ft.														
12	40	6.94	8.50	9.82	11.0	12.0	13.0	13.9	14.7	15.5	16.3	17.0	17.7	–	–
	50	6.66	8.16	9.42	10.5	11.5	12.5	13.3	14.1	14.9	15.6	16.3	17.0	17.6	–
	60	6.42	7.86	9.08	10.1	11.1	12.0	12.8	13.6	14.4	15.1	15.7	16.4	17.0	17.6
	70	6.18	7.57	8.74	9.76	10.7	11.6	12.4	13.1	13.8	14.5	15.1	15.8	16.4	16.9
	80	5.98	7.33	8.46	9.45	10.4	11.2	12.0	12.7	13.4	14.0	14.7	15.3	15.8	16.4
	90	5.80	7.11	8.21	9.16	10.0	10.9	11.6	12.3	13.0	13.6	14.2	14.8	15.3	15.9
	100	5.62	6.88	7.95	8.88	9.72	10.5	11.2	11.9	12.6	13.2	13.8	14.3	14.9	15.4
	110	5.48	6.71	7.75	8.66	9.48	10.3	11.0	11.6	12.3	12.9	13.4	14.0	14.5	15.0
	120	5.34	6.54	7.56	8.44	9.24	10.0	10.7	11.3	11.9	12.5	13.1	13.6	14.1	14.6
	130	5.20	6.37	7.36	8.22	9.00	9.72	10.4	11.0	11.6	12.2	12.7	13.3	13.8	14.3
	140	5.08	6.22	7.19	8.03	8.79	9.50	10.2	10.8	11.4	11.9	12.5	13.0	13.4	13.9
	150	4.98	6.10	7.05	7.87	8.62	9.31	10.0	10.6	11.1	11.7	12.2	12.7	13.2	13.7
	160	4.86	5.95	6.88	7.68	8.41	9.09	9.72	10.3	10.9	11.4	11.9	12.4	12.9	13.3
14	40	9.78	12.0	13.8	15.5	16.9	18.3	19.6	20.7	21.9	22.9	24.0	24.9	–	–
	50	9.44	11.6	13.3	14.9	16.4	17.7	18.9	20.0	21.1	22.1	23.1	24.1	25.0	–
	60	9.10	11.1	12.9	14.4	15.8	17.0	18.2	19.3	20.3	21.3	22.3	23.2	24.1	24.9
	70	8.84	10.8	12.5	14.0	15.3	16.5	17.7	18.8	19.8	20.7	21.7	22.5	23.4	24.2
	80	8.56	10.5	12.1	13.5	14.8	16.0	17.1	18.2	19.1	20.1	21.0	21.8	22.6	23.4
	90	8.32	10.2	11.8	13.2	14.4	15.6	16.6	17.7	18.6	19.5	20.4	21.2	22.0	22.8
	100	8.12	9.94	11.5	12.8	14.0	15.2	16.2	17.2	18.2	19.0	19.9	20.7	21.5	22.2
	110	7.90	9.67	11.2	12.5	13.7	14.8	15.8	16.8	17.7	18.5	19.4	20.1	20.9	21.6
	120	7.72	9.45	10.9	12.2	13.4	14.4	15.4	16.4	17.3	18.1	18.9	19.7	20.4	21.1
	130	7.54	9.23	10.7	11.9	13.1	14.1	15.1	16.0	16.9	17.7	18.5	19.2	20.0	20.6
	140	7.36	9.01	10.4	11.6	12.7	13.8	14.7	15.6	16.5	17.3	18.0	18.8	19.5	20.2
	150	7.22	8.84	10.2	11.4	12.5	13.5	14.4	15.3	16.1	16.9	17.7	18.4	19.1	19.8
	160	7.08	8.67	10.0	11.2	12.3	13.2	14.2	15.0	15.8	16.6	17.3	18.1	18.7	19.4
16	40	13.2	16.2	18.7	20.9	22.9	24.7	26.4	28.0	29.5	31.0	32.4	–	–	–
	50	12.9	15.7	18.1	20.2	22.1	23.9	25.6	27.1	28.6	30.0	31.3	32.6	–	–
	60	12.4	15.2	17.6	19.6	21.5	23.2	24.8	26.3	27.7	29.1	30.4	31.6	32.8	–
	70	12.1	14.7	17.0	19.0	20.8	22.5	24.1	25.5	26.9	28.2	29.5	30.7	31.9	33.0
	80	11.7	14.4	16.6	18.5	20.3	21.9	23.4	24.9	26.2	27.5	28.7	29.9	31.0	32.1
	90	11.5	14.0	16.2	18.1	19.8	21.4	22.9	24.3	25.6	26.9	28.1	29.2	30.3	31.4
	100	11.2	13.7	15.8	17.6	19.3	20.9	22.3	23.7	24.9	26.2	27.3	28.5	29.5	30.6
	110	10.9	13.4	15.4	17.2	18.9	20.4	21.8	23.1	24.4	25.6	26.7	27.8	28.8	29.9
	120	10.7	13.1	15.1	16.8	18.4	19.9	21.3	22.6	23.8	25.0	26.1	27.2	28.2	29.2
	130	10.4	12.8	14.8	16.5	18.1	19.5	20.9	22.1	23.3	24.5	25.6	26.6	27.6	28.6
	140	10.2	12.5	14.5	16.2	17.7	19.1	20.4	21.7	22.8	23.0	25.0	26.1	27.0	28.0
	150	10.0	12.3	14.2	15.9	17.4	18.8	20.1	21.3	22.4	23.5	24.6	25.6	26.6	27.5
	160	9.84	12.1	13.9	15.6	17.0	18.4	19.7	20.9	22.0	23.1	24.1	25.1	26.0	27.0

Weir Flow Controls; "h" less than 1.4D

Diameter = 12"		Diameter = 14"		Diameter = 16"	
h	Q	h	Q	h	Q
0.20	0.16	0.23	0.24	0.27	0.33
0.40	0.46	0.47	0.68	0.53	0.94
0.60	0.88	0.70	1.30	0.80	1.80
0.80	1.00	0.94	1.17	1.06	1.33
1.10	2.50	1.28	3.26	1.46	4.49
1.56	2.20	2.31	3.70	3.10	5.10

Table 2

HEAD DISCHARGE TABLES FOR WELDED STEEL PIPE HOOD INLETS FULL PIPE FLOW CONDITIONS (For Dams)

Head In Ft.		4	6	8	10	12	14	16	18	20	22	24	26	28	30
Barrel		Q (Discharge In CFS)													
Dia. In.	Lg. Ft.														
18	40	17.1	21.0	24.2	27.1	29.7	32.1	34.3	36.3	38.3	40.2	–	–	–	–
	50	16.6	20.4	23.5	26.3	28.8	31.1	33.3	35.3	37.2	39.0	40.8	–	–	–
	60	16.2	19.8	22.9	25.6	28.0	30.2	32.3	34.3	36.1	37.9	39.6	41.2	–	–
	70	15.8	19.3	22.3	24.9	27.3	29.5	31.5	33.4	35.2	36.9	38.6	40.2	41.7	–
	80	15.4	18.8	21.7	24.3	26.6	28.8	30.7	32.6	34.4	36.0	37.6	39.2	40.7	–
	90	15.0	18.4	21.2	23.8	26.0	28.1	30.0	31.9	33.6	35.2	36.8	38.3	39.8	41.1
	100	14.7	18.0	20.8	23.3	25.5	27.5	29.4	31.2	32.9	34.5	36.0	37.5	38.9	40.3
	110	14.4	17.6	20.3	22.7	24.9	26.9	28.7	30.5	32.1	33.7	35.2	36.6	38.0	39.3
	120	14.1	17.3	19.9	22.3	24.4	26.4	28.2	29.9	31.5	33.0	34.5	35.9	37.3	38.6
	130	13.8	16.9	19.5	21.8	23.9	25.8	27.6	29.3	30.9	32.4	33.8	35.2	36.6	37.8
	140	13.4	16.6	19.2	21.5	23.5	25.4	27.1	28.8	30.4	31.8	33.2	34.6	35.9	37.2
	150	13.3	16.3	18.8	21.0	23.0	24.9	26.6	28.2	29.7	31.2	32.6	33.9	35.2	36.4
	160	13.1	16.0	18.5	20.7	22.7	24.5	26.2	27.8	29.3	30.7	32.1	33.4	34.6	35.8

Weir Flow Controls; "h" less than 1.4D

Diameter = 18"			
h	Q	h	Q
0.30	0.44	1.20	4.30
0.60	1.27	1.50	6.06
0.90	2.43	1.65	6.89

Table 2

Note: To determine "Q" for length not shown in the tables.

$$Q_2 = \sqrt{\frac{Q_1^2 \ (2 + K_p L_1)}{2 + K_p \ L_2}}$$

Subscript 1 Value of length from table.
Subscript 2 Assumed value of length.

Example: Find "Q" for 106' length of pipe
Welded steel pipe, Diameter 18" Head = 14

$$Q_2 = \sqrt{\frac{27.5^2 \ \left[2 + (.0155)\ (100)\right]}{2 + (.0155)\ (106)}} \qquad Q_2 = \sqrt{\frac{756.25 \times 3.550}{3.643}} \qquad Q_2 = 27.15 \text{ cfs}$$

HEAD DISCHARGE TABLES FOR WELDED STEEL PIPE HOOD INLETS FULL PIPE FLOW CONDITIONS (For Dams)

To determine "Q" for heads not shown in the tables.

$$Q_2 = \sqrt{\frac{H_2\ Q_1^2}{H_1}}$$

Subscript 1 = Value of H from table.
Subscript 2 = Assumed value of H.

Example: Find "Q" for 14.5 Head
Welded Steel Pipe, Diameter 18" Length = 80'

$$Q_2 = \sqrt{\frac{14.5\ \ (28.8^2)}{14}} \qquad Q_2 = \sqrt{\frac{14.5 \times 829.44}{14}} \qquad Q_2 = 29.31 \text{ cfs}$$

Corrugated Metal Pipe n = 0.025								
Diameter of Pipe (I.D.)	8"	10"	12"	15"	18"	21"	24"	30"
K_p = Friction Loss	0.199	0.148	0.1157	0.0859	0.0674	0.0549	0.0459	0.0341

Welded Steel Pipe n = 0.012							
Diameter of Pipe (O.D.)	6"	8"	10"	12"	14"	16"	18"
K_p = Frictional Loss	0.0672	0.0458	0.0340	0.0267	0.0217	0.0198	0.0155