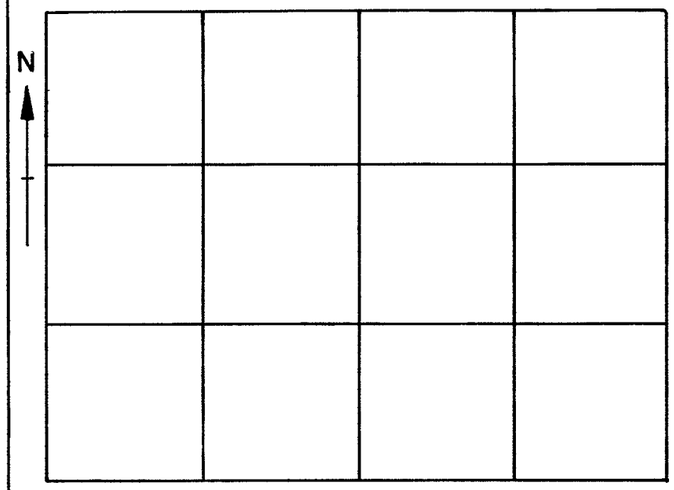

Sec. _____

T_____ R_____

LOCATION MAP

Scale-1" = _____ feet

SEEDING RECOMMENDATION

Seed: _____

Fertilizer: _____

Mulch: _____

Bench mark: _____

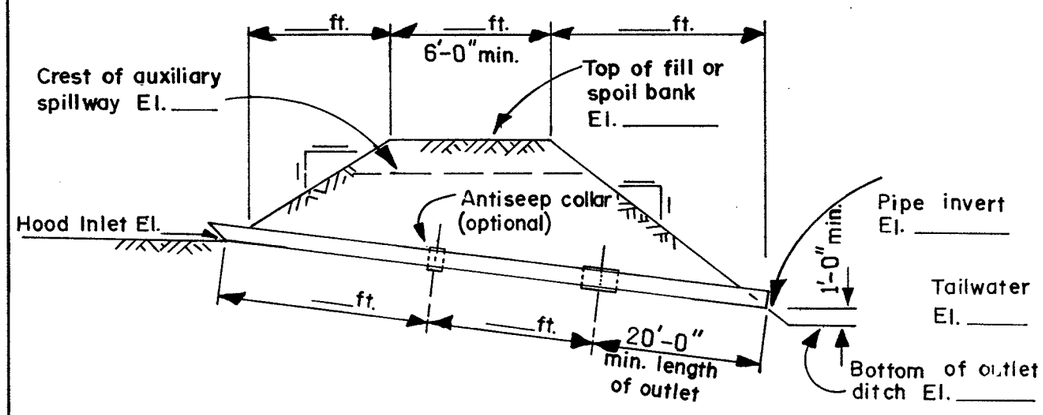

PROFILE ALONG CENTERLINE OF STRUCTURE

ESTIMATE OF MATERIALS

ITEM	QUANTITY
Excavation	_____ Cu. yd.
Earth fill	_____ Cu. yd.
Pipe, _____ inch diameter, C.M.P., Metal thickness _____ GA. with Connections and hood inlet	_____ Lin. ft.
Antivortex device or baffle	_____ Each
Trash rack and protective fence	_____ Each
Anti-seep collar	_____ Each
Seeding	_____ Acres
Fencing	_____ Feet

CORRUGATED METAL PIPE CONDUIT WITH HOOD INLET

U. S. DEPARTMENT OF AGRICULTURE
SOIL CONSERVATION SERVICE

Designed _____ Date _____ Approved by _____ Title _____
Drawn _____ Title _____
Traced _____ Sheet No. _____ of _____ Drawing No. _____
Checked _____

MICHIGAN ENGINEERING STANDARD DRAWING

APPROVED BY H W Belcher Jr. S.C.E. DATE 2/26/82

DRAWING NO SO-L-0620 SHEET 1 OF 2

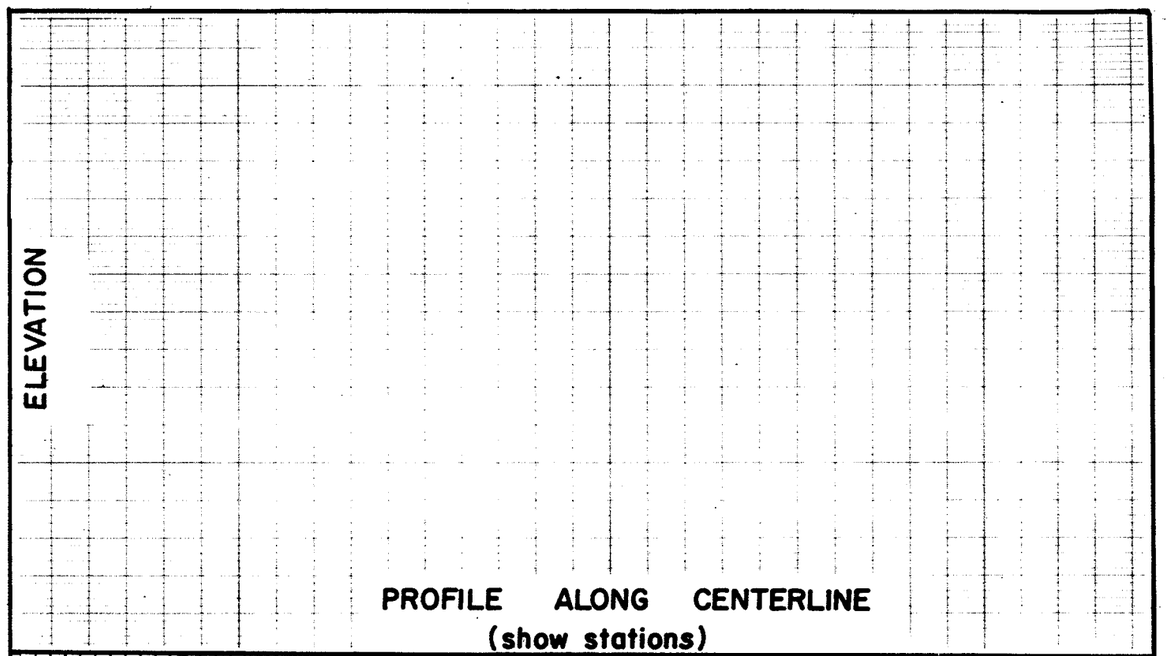

PROFILE ALONG CENTERLINE
(show stations)

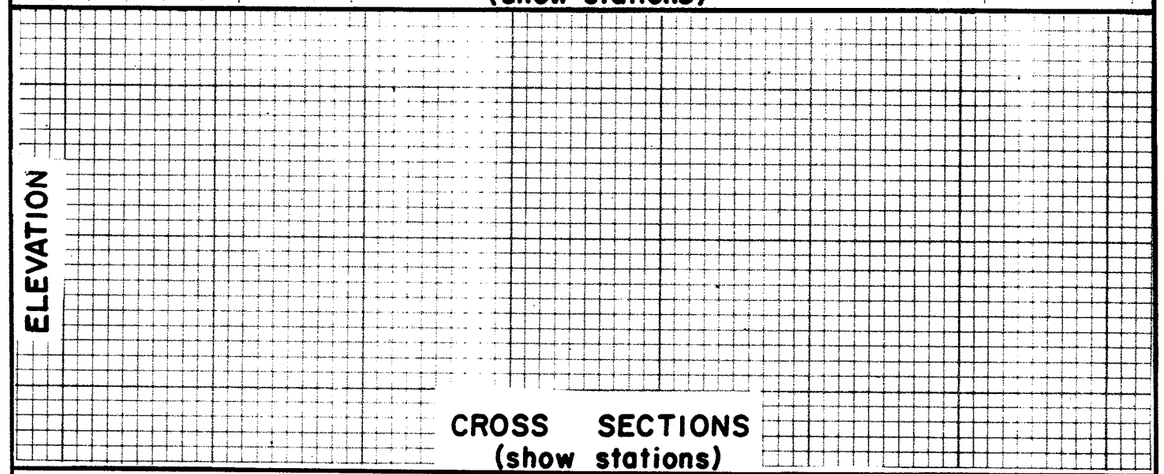

CROSS SECTIONS
(show stations)

DRAWING NO SO-L-0615 0620 SHEET 2 OF 2

U. S. DEPARTMENT OF AGRICULTURE
SOIL CONSERVATION SERVICE

Designed _____ Date _____ Approved by _____ Title _____
Drawn _____ Title _____
Traced _____ Sheet No. _____ of _____ Drawing No. _____
Checked _____