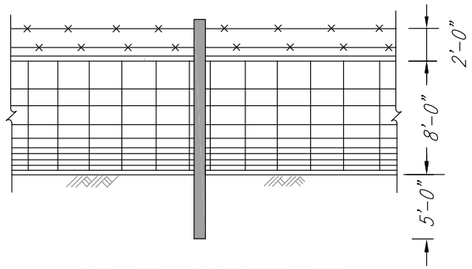

WOVEN WIRE AND 2 BARBED WIRES

WIRE DETAIL

Steel line posts shall be t-type, with triangular shaped ground line pressure plate. They shall be driven into the ground to a depth that the ground line pressure plate is buried. Minimum weight per foot 1.33 lbs. exclusive of anchor plate.

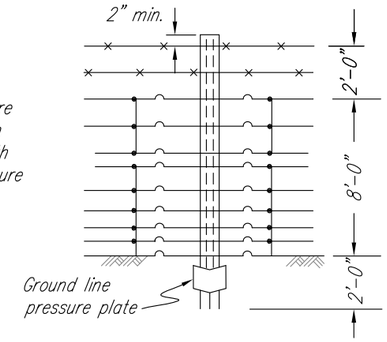

STEEL LINE POST DETAIL

ESTIMATED QUANTITIES

ITEM	SIZE	LENGTH	APPROXIMATE QUANTITY
Corner Post (CP)	6" min.	15'-0"	
Brace Post (BP)	5" min.	15'-0" min.	
Line Post (LP) (wood)	4" min.	15'-0" min.	
Brace (see Note #12)	3.5" min.	10'-0"	
Dowel Pins - Steel	3/8" diam.	5", 10"	
Farm Fence Fabric (Woven Wire) Galvanized	2096-12	As Required	
Barbed Wire - Galvanized	12 1/2 gauge	As Required	
Brace Wire - Galvanized	9 or 12 1/2 gauge	As Required	
Staples	9 gauge		

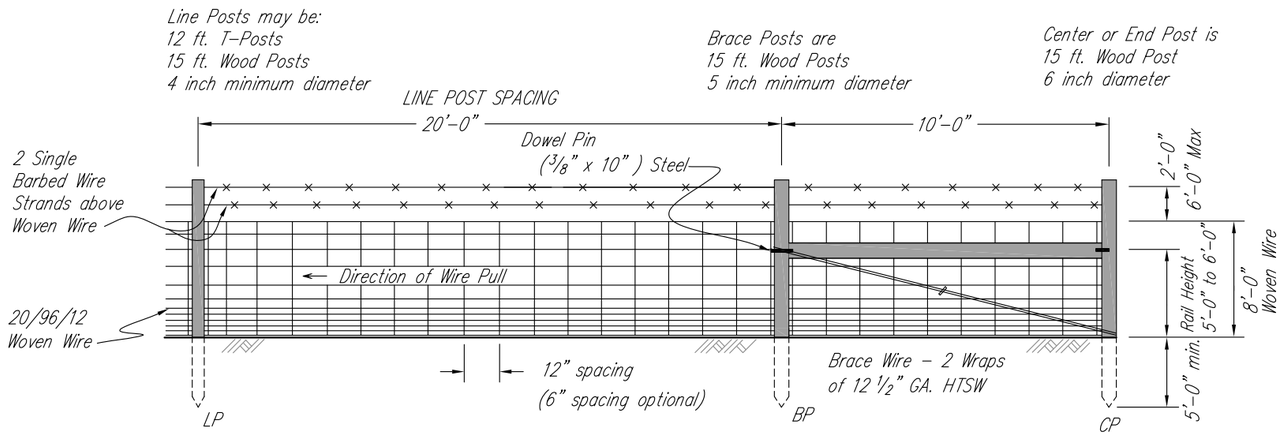

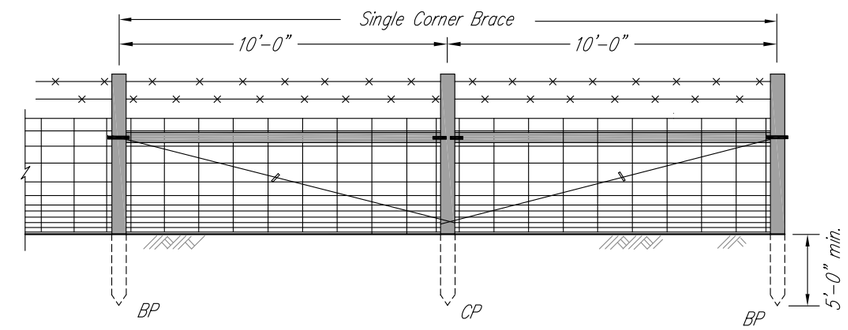

FENCE ELEVATION

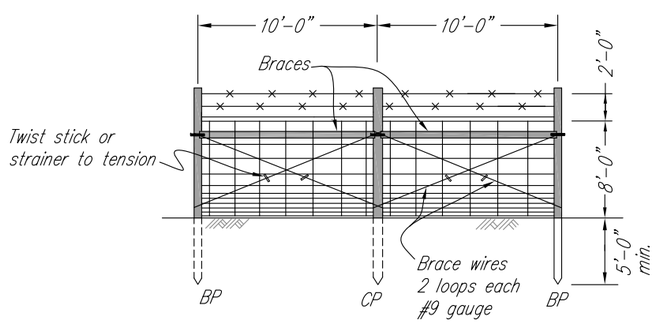

DOUBLE PULL POST ASSEMBLY

NOTES:

1. If standard steel "t" posts are used (1.33 lbs/ft) install a 5 inch diameter top wooden post or a 2 7/8" Schedule 40 steep pipe post (capped) every 100 feet.
2. Space line posts 20 feet apart or less.
3. Install an in-line double pull post brace assembly in straight fence sections at intervals of no more than 660 feet.
4. Corner, end and gate assemblies are constructed of wood and designed as an "H" brace. In soils with textures of loamy fine sand or coarser, or in wet soils, or where soil depth is restricting, use the "double H" brace assembly: three driven posts and two rails with the wire tie-off on the center post.
5. A minimum of two crimping sleeves on a single wire splice to join fence sections are required.
6. At corner posts, staple each at quarter points of posts. At brace posts, double staple each wire. At line posts secure each wire with standard clamps, staples, fastening clips, and/or insulators.
7. Staples to be minimum 9-gauge, galvanized and 1 3/4" long.
8. Minimum net retention of chromated copper arsenate (CCA) or alkaline copper Quat (ACQ) for wood fence posts shall be 0.40 lbs. per cubic foot. Untreated wood fence posts may be decay resistant wood such as cedar or osage orange.
9. A commercial metal (galvanized steel, painted steel, or aluminum) gate acceptable to the NRCS Representative complete with necessary hardware and fittings shall be used. Distance from gate to ground level must not exceed 6 inches at any point.
10. Top strands may be barbed wire as shown, or high tensile smooth wire, polycoated high tensile, polybraid or polytape.
11. Join the horizontal brace members to the Corner Post of a Single Corner Brace with steel dowel pins 3/8" by 5" long in pre-drilled holes 2-3" deep into the Corner Post and brace. Construct all other brace assemblies using 3/8" by 10" steel dowel pins driven through pre-drilled borings in the Center Post and Brace posts to join the horizontal brace. Leave approximately 1" of dowel pin showing on each Brace Post to attach the brace wire.
12. Brace Options: 3 1/2" minimum diameter or square wood braces or tubular steel braces, 2" min. O.D. or steel flanged U braces, 1.8 lbs./ft., ends pinched and drilled and fastened to posts with 3/8" x 3" lag screws, may be used. All braces and screws shall be galvanized for CCA treated or decay resistant wood, or hot dip galvanized for ACQ treated wood.

All dimensions in inches or feet-inches.

NOT TO SCALE

MICHIGAN ENGINEERING STANDARD DRAWING	
FILE NAME MI-223-B 9-09.dwg	
STANDARD DWG. NO. MI-223-B	
DATE 9-09	SHEET 1 OF 1

Date
Designed
Drawn
Checked
Approved

WOVEN WIRE FEED SECURITY FENCE DETAIL

Co., Michigan
Township, T. -R. , Sec.

NRCS
Natural Resources Conservation Service
United States Department of Agriculture

File Name
Drawing Name
Sheet of