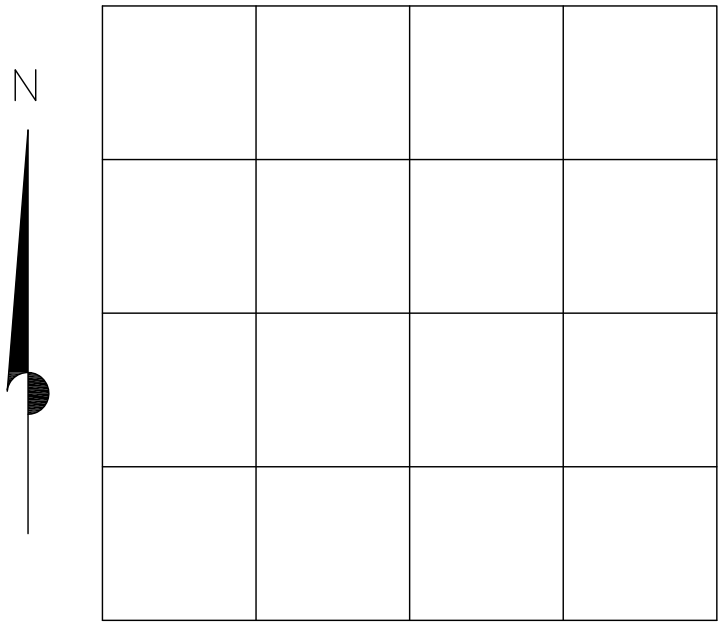

Sec._____

T._____ R._____

LOCATION MAP

Scale 1" = _____ Feet

SEEDING RECOMMENDATION

Seed: _____

Fertilizer: _____

Mulch: _____

Bench Mark: _____

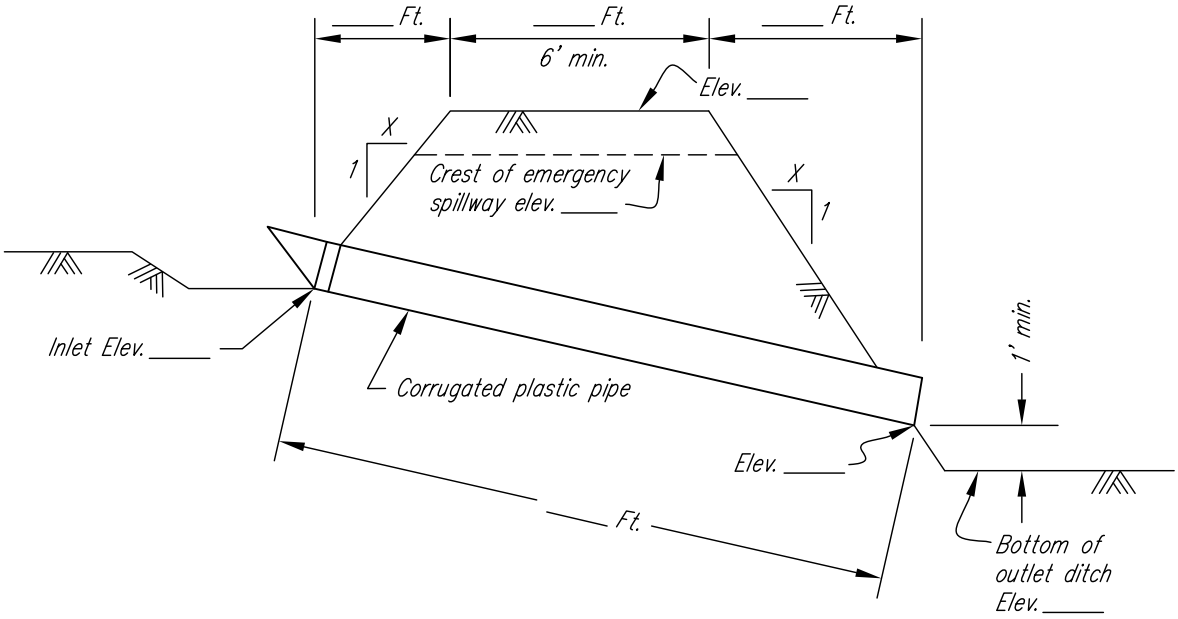

ESTIMATE OF MATERIALS

ITEM	QUANTITY
Excavation	_____ Cu. Yd.
Earth Fill	_____ Cu. Yd.
Pipe, _____ Inch Dia.	
Plastic with standard couplings	_____ Lin. Ft.
Seeding	_____ Acres
Fencing	_____ Feet

Not to Scale

MICHIGAN ENGINEERING STANDARD DRAWING

FILE NAME MI-155-A 1-11.dwg

STANDARD DWG. NO. MI-155-A

DATE 1-11 SHEET 1 OF 2

Sheet of

Drawing Name

File Name

NRCS
Natural Resources Conservation Service
United States Department of Agriculture

Channel Side Inlet 8"-10"-12"-15" Dia.
Corrugated Plastic Pipe - Hood Inlet

Co., Michigan
Township, T. -R. , Sec.

		Date
Designed		
Drawn		
Checked		
Approved		

Plan Map

Scale:

Profile Along Centerline of Fill
(show soil borings)

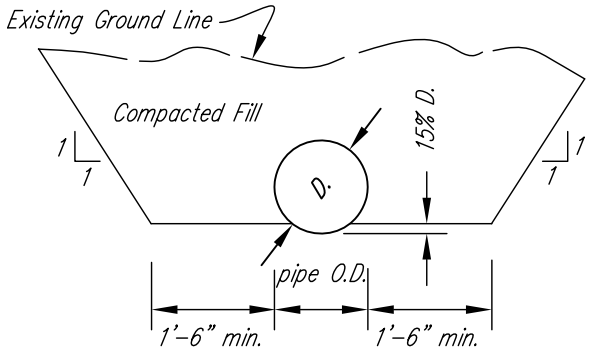

Typical Pipe Installation

Cross Section of Auxiliary Spillway

MICHIGAN ENGINEERING STANDARD DRAWING	
FILE NAME MI-155-A 1-11.dwg	
STANDARD DWG. NO. MI-155-A	
DATE 1-11	SHEET 2 OF 2

Sheet of

Drawing No.

File No.

NRCS
Natural Resources Conservation Service
United States Department of Agriculture

Channel Side Inlet 8"-10"-12"-15" Dia.
Corrugated Plastic Pipe - Hood Inlet

Co., Michigan
Township, T. -R. , Sec.

		Date
Designed		
Drawn		
Checked		
Approved		