CONSTRUCTION DATA

Layout by _____ Date _____

Contractor _____ Completed Date _____

Practice (does)(does not) meet standards and specifications

Checked by _____ Date _____

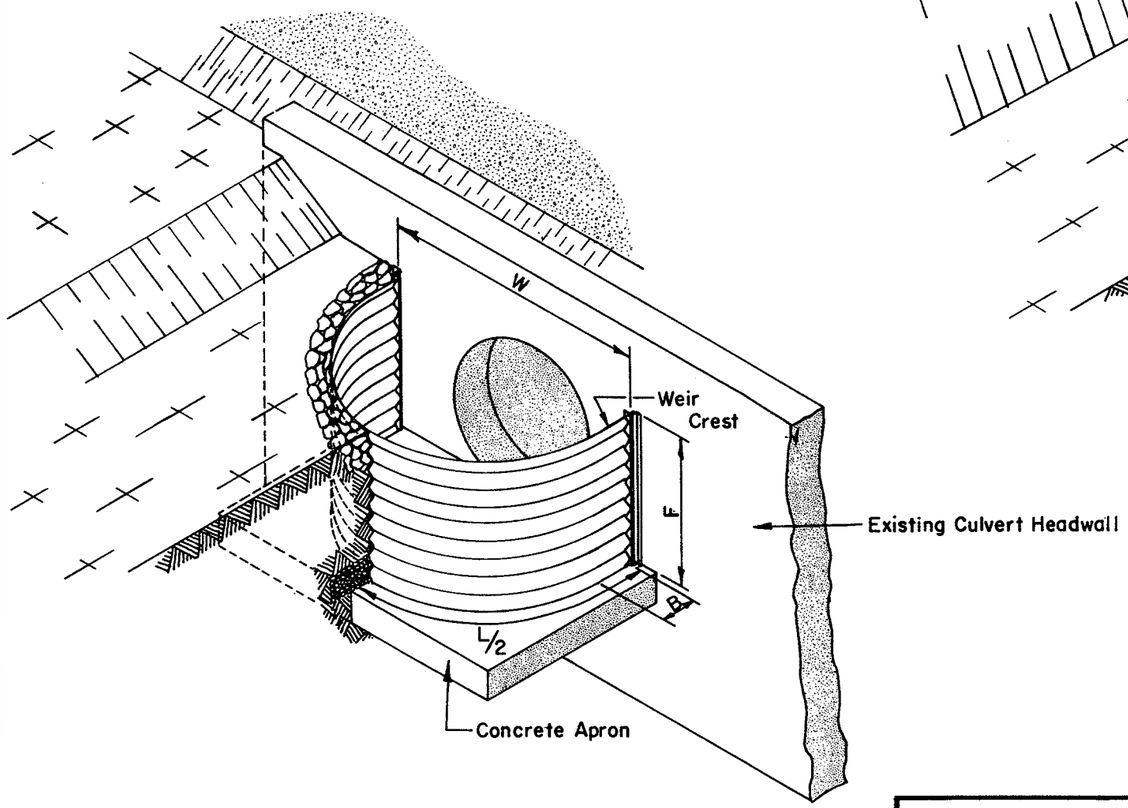

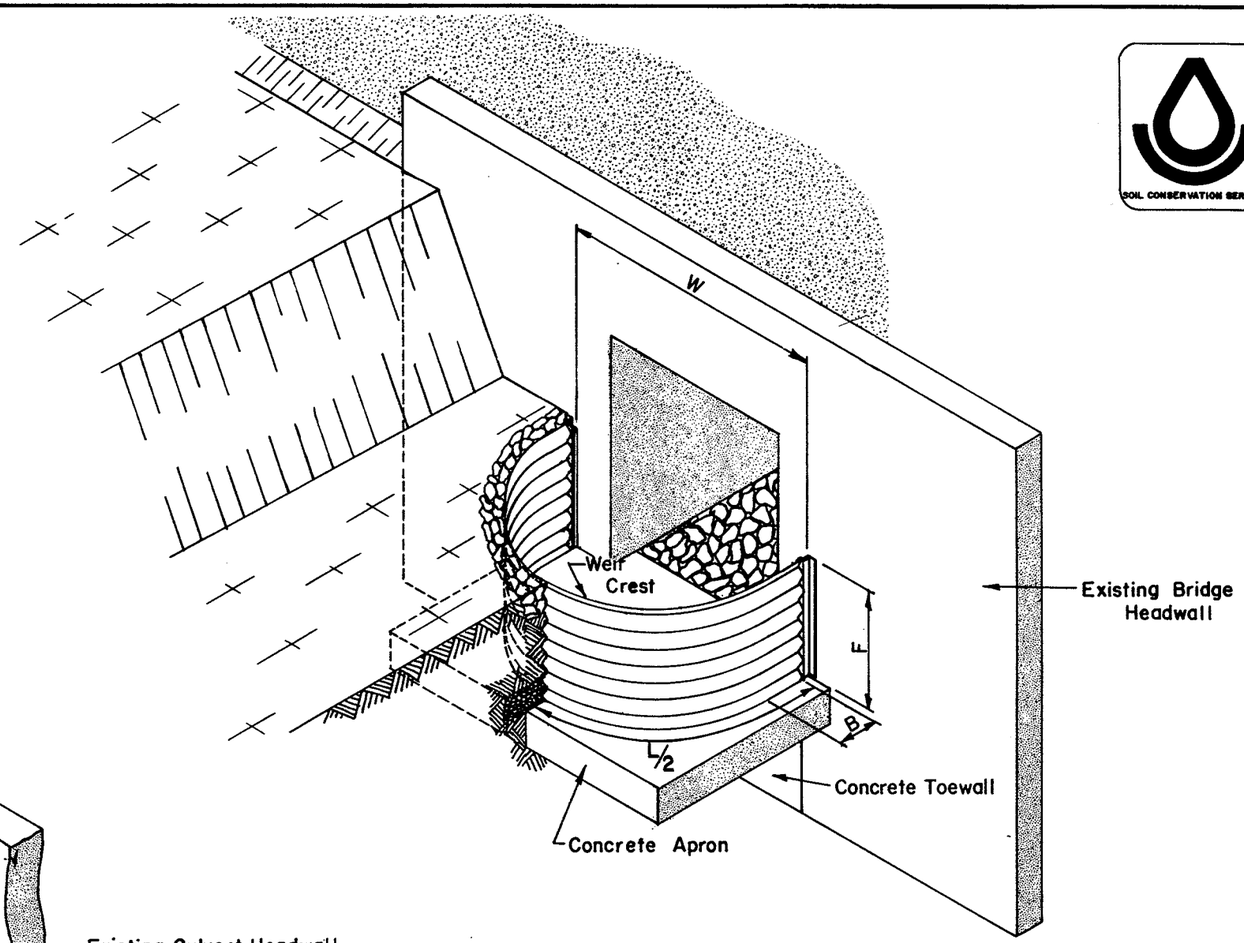

Not to Scale

COOPERATOR _____

_____ County, Michigan

Location _____

ELEVATIONS

Road at Structure ℄ _____

Low Point in Road _____

Weir Crest _____

Apron _____

STRUCTURE DIMENSIONS

F _____

W _____

L _____

B _____

BENCH MARK

Elevation _____

Description: _____

FABRICATED CORRUGATED ALUMINUM TOEWALL DROP SPILLWAY ATTACHED TO EXISTING CULVERT GENERAL LAYOUT

U. S. DEPARTMENT OF AGRICULTURE
SOIL CONSERVATION SERVICE

STANDARD STRUCTURE SIZES			
F	1.9'	3.0'	4.0'

Adapted from Indiana Drwg. 5,0-32,723-P Sheets 1 and 2 of 2

Public Road Official's Approval:
Approved by:

Signature _____

Title _____

Designed _____ Date _____

Drawn _____

Adapted _____

Checked _____

Approved by _____
Title State Cons. Eng.

Title _____

Sheet No. _____ of _____

Drawing No.

MICH. STD DRWG. SO-N-0340 Sheet 1 of 2

QUANTITIES

Structure _____ 1 ____ each

Concrete _____ cu. yds.

Reinforcing Bars #5's (5/8" ø) _____ lin. ft.

or #4's (1/2" ø) _____ lin. ft.

Filter Drain (0.04 x L) _____ cu. yds.

Riprap (0.03 x L cu. yds.) _____

Site Preparation _____

Excavation and Backfill _____

Drain Tile Outlet _____ each

CONSTRUCTION NOTES

1. EXCAVATE FOR CONCRETE APRON AND TOEWALL IN UNDISTURBED SOIL. SIDE SLOPES ABOVE THE TOP OF CONCRETE SHALL BE 1:1 OR FLATTER.
2. SET ALUMINUM STRUCTURE TO GRADE, ANCHOR TO EXISTING HEADWALL, AND PLACE REINFORCING BARS THROUGH BOLTHOLES IN ALUMINUM SHEETS BEFORE POURING CONCRETE FOR APRON AND TOEWALL.
3. PLACE FILTER DRAIN AND LAY TILE TO OUTLET STUB.
4. BACKFILL AROUND STRUCTURE WITH MOIST SOIL. PLACE BACKFILL IN SHALLOW LAYERS AND TAMP WELL. REMOVE DRY SOIL FROM SIDES OF EXCAVATIONS AS BACKFILL IS PLACED SO THAT MOIST SOIL IS TAMPED AGAINST MOIST SOIL. KEEP BACKFILL APPROXIMATELY LEVEL AROUND ALL PARTS OF THE STRUCTURE.
5. PLACE RIPRAP AND COMPLETE SHAPING AND GRADING.
6. SEED ALL DISTURBED AREAS.

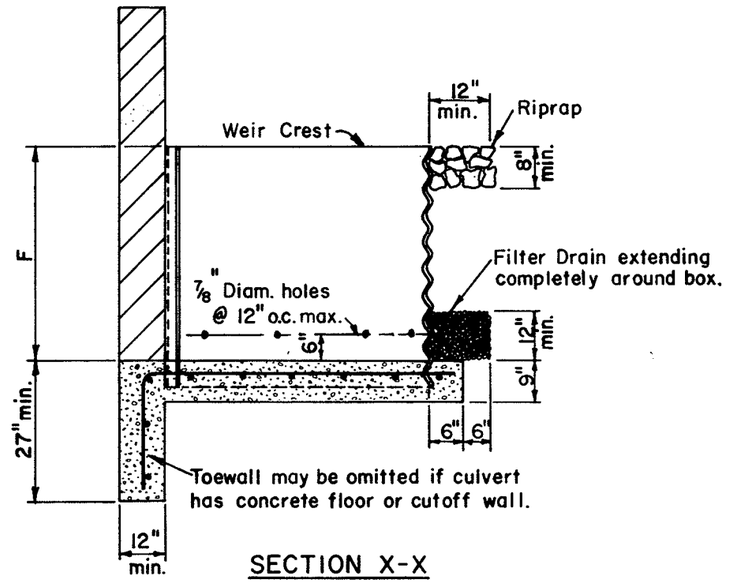

SECTION X-X

TILE OUTLET STUB

Aluminum pipe shall be shop welded to structure for drain tile outlet when specified below:

___ " diam., 2' stub required at

___ o' clock position. Bottom invert

___ ' below weir crest.

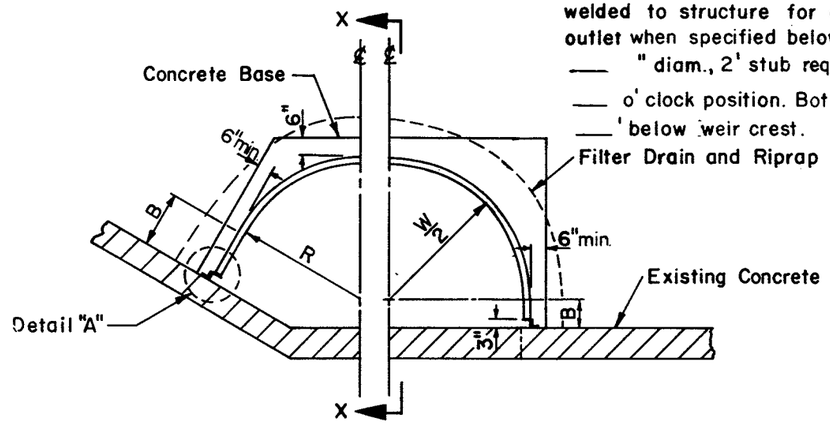

TOP VIEW - ALUMINUM STRUCTURE ONLY

MATERIAL NOTES:

1. ALUMINUM SHEETS SHALL BE STRUCTURAL PLATE (2.5" X 9.0" CORRUGATIONS) 0.100" THICKNESS.
2. APPLY ASPHALTIC MASTIC BETWEEN ALUMINUM SHEETS BEFORE BOLTING TOGETHER.
3. APRON AND TOEWALL REINFORCING SHALL BE #5 RE-BARS @ 15" O.C. BOTH WAYS, OR #4 RE-BARS @ 12" O.C. BOTH WAYS.
4. CONCRETE SHALL HAVE A MINIMUM COMPRESSIVE STRENGTH AT 28 DAYS EQUAL TO 3000 P.S.I. (6-BAG MIX).
5. FILTER DRAIN SHALL CONSIST OF SAND, GRAVEL, OR CONCRETE AGGREGATE MIXTURE WITH 50 TO 80% PASSING A NO. 4 SIEVE, MAXIMUM SIZE OF 3" AND NOT MORE THAN 5% PASSING A NO. 200 SIEVE.
6. RIPRAP MAY CONSIST OF WELL-GRADED ROCK, MAXIMUM SIZE 6", OR 8" CONCRETE BLOCK SET WITH CORE OPENINGS UP AND FILLED WITH SOIL.

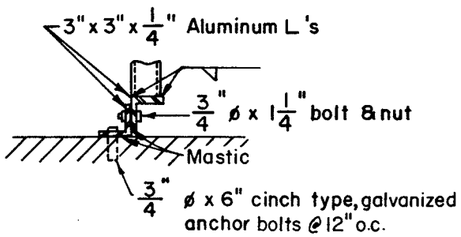

DETAIL "A"

Not to Scale

COOPERATOR _____

_____ County, Michigan

FABRICATED CORRUGATED ALUMINUM TOEWALL DROP SPILLWAY ATTACHED TO EXISTING CULVERT

STRUCTURE DETAILS

U. S. DEPARTMENT OF AGRICULTURE
SOIL CONSERVATION SERVICE

	Date		
Designed		Approved by	
		Title	
Drawn			
		Title	
Adapted		Sheet No.	Drawing No.
Checked		of	