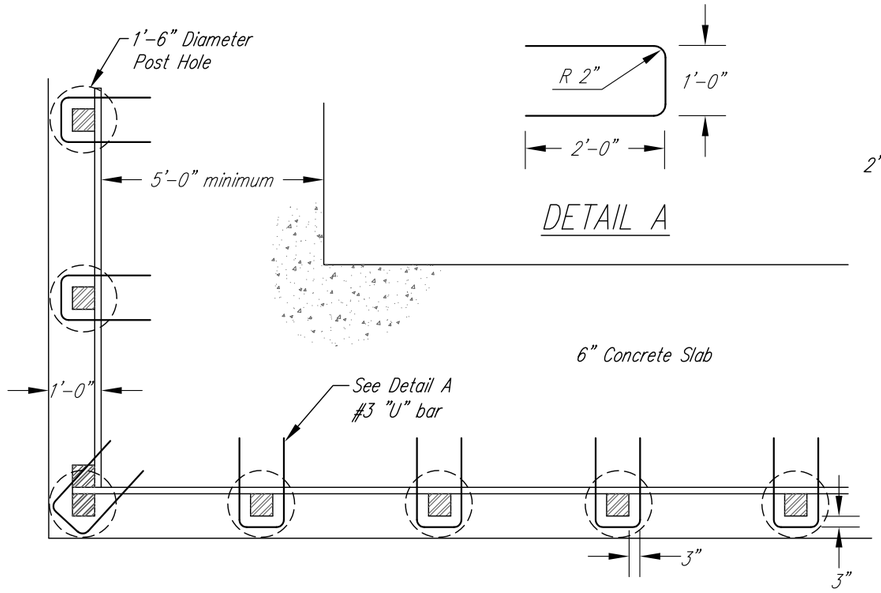

PLAN VIEW – HALF VIEW

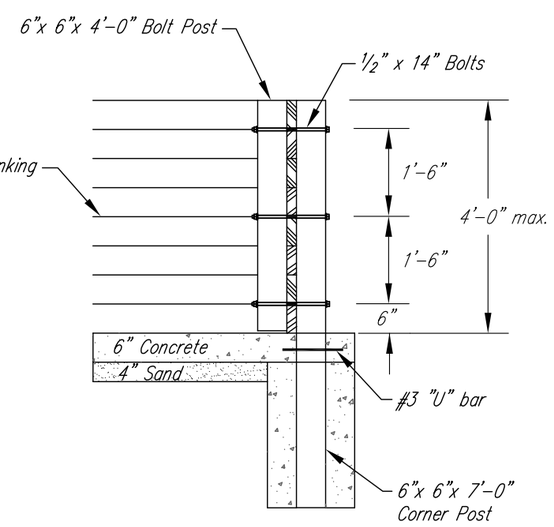

DETAIL A

CORNER DETAIL

BILL OF MATERIALS		
MATERIAL	UNIT	QUANTITY
6"x 6"x 7'-0" Pressure-Treated Post	each	
6"x 6"x 4'-0" Pressure-Treated Post	each	
2"x 6" Pressure-Treated Wall Planking	feet	
Concrete Floor	cu. yds.	
Post Hole Concrete	cu. yds.	
#3 Bars	lin. ft.	
1/2"x 14" Bolts with Washers	each	
20d Ring-shanked Nails or 3" screws (approx. 0.04 lb. per sq. ft. of wall)	lbs.	

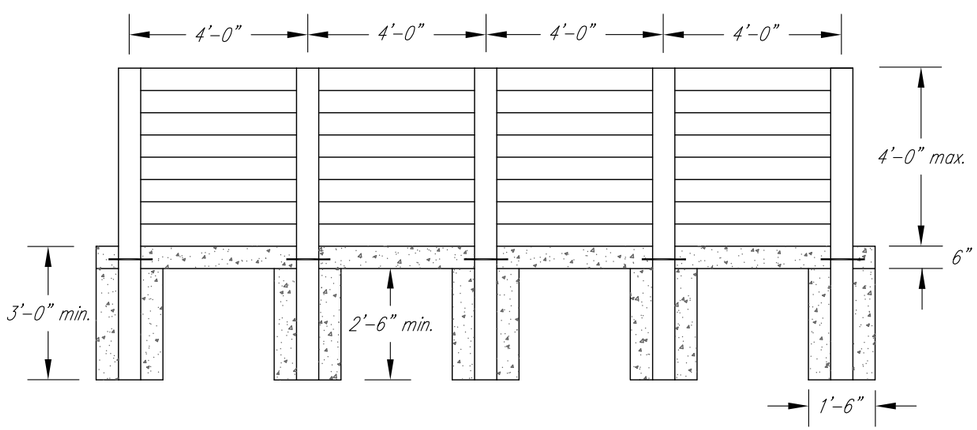

ELEVATION VIEW

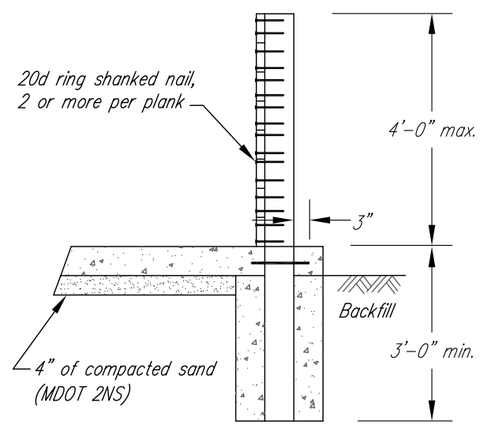

NAILING – POST DETAIL

DESIGN ASSUMPTIONS

Inside Wall Loading – 65 lb. – sq.ft./ft. of height
Allowable Timber Stress – 1200 p.s.i.
Allowable Steel Stress – 20,000 p.s.i.

SPECIFICATIONS AND CONSTRUCTION NOTES

1. Wood materials used shall be pressure treated with a wood preservative. All wood construction shall meet the requirements of Construction Specification MI-174, Timber Fabrication and Installation.

2. For all reinforcing steel, the minimum concrete cover shall be 2", and the minimum radius of bends shall be 2".

3. Concrete shall meet the requirements of Construction Specification MI-159, Plain Concrete.

4. Earth backfill against the outside of the plank wall shall not be more than 12" above the concrete floor.

CONSTRUCTION SEQUENCE

1. Posts shall be placed in post holes, aligned and braced, prior to pouring concrete in the post holes.

2. Compacted sand base shall be placed on undisturbed earth unless otherwise specified.

3. Planks shall be spiked to the posts a minimum of 48 hours after concrete placement.

4. Joints of wall planking shall be staggered.

Dimensions in inches or feet-inches

Not to Scale

MICHIGAN ENGINEERING STANDARD DRAWING	
FILE NAME MI-690-B 12-10.dwg	
STANDARD DWG. NO. MI-690-B	
DATE 12-10	SHEET 1 OF 1

Date
Designed
Drawn
Checked
Approved

4 FOOT POST AND PLANK WALL

Co., Michigan
Township, T. -R. , Sec.

NRCS
Natural Resources Conservation Service
United States Department of Agriculture

File Name
Drawing Name
Sheet of