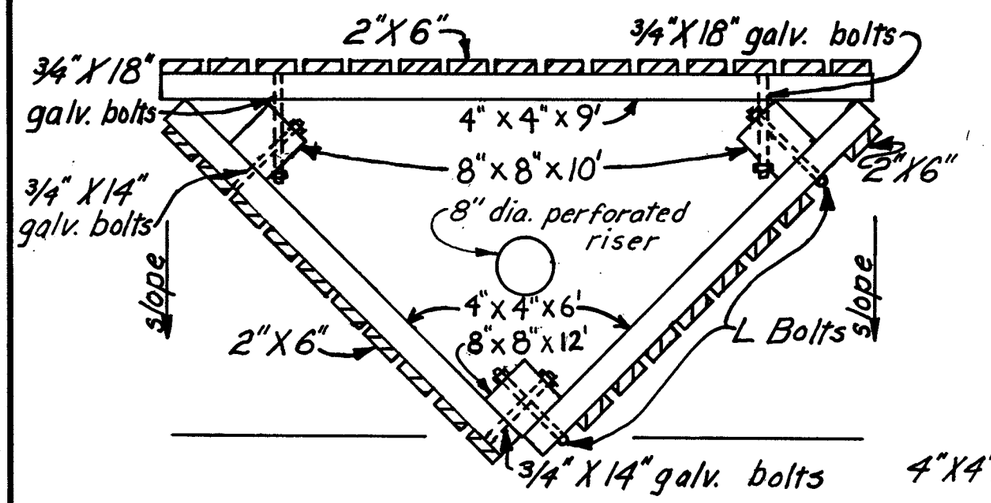

TOP VIEW

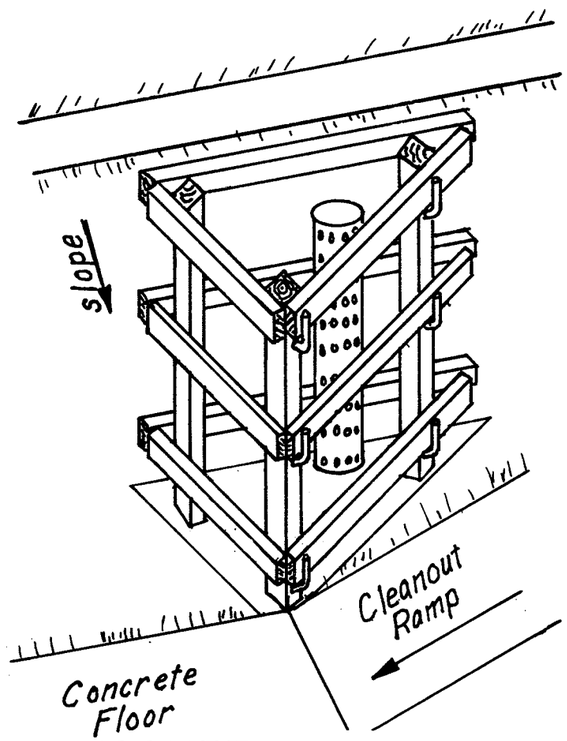

ISOMETRIC VIEW

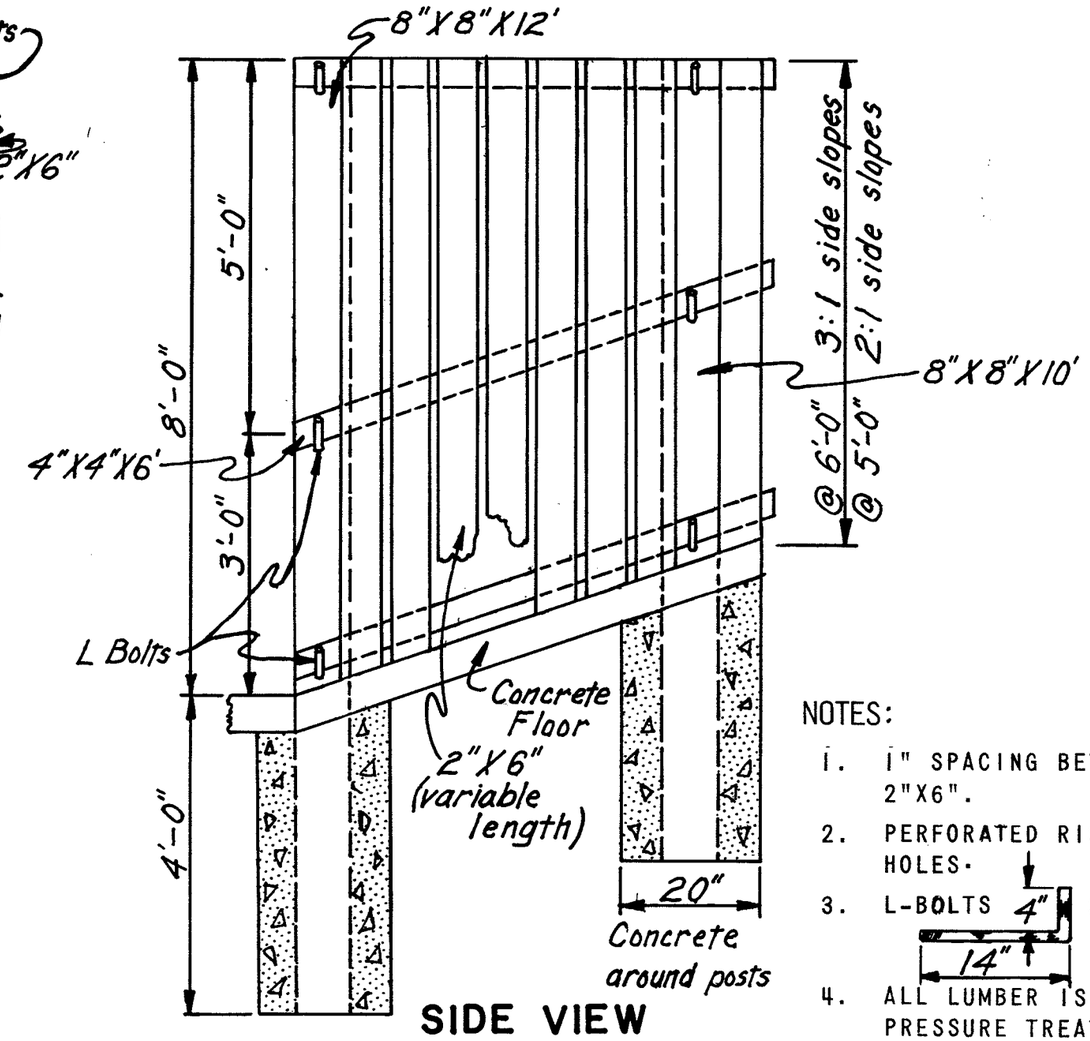

SIDE VIEW

NOTES:

1. 1" SPACING BETWEEN THE 2"X6".
2. PERFORATED RISER 1" HOLES.
3. L-BOLTS

3/4" GALV.
4. ALL LUMBER IS TO BE PRESSURE TREATED.
5. RISER IS 8' ABOVE AND 4' BELOW GROUND W/ 6" DIA. TILE TO HOLDING POND.

MATERIALS

ITEM	QUANTITY
8"X8"X12' POST	1
8"X8"X10' POST	2
4"X4" BRACING	63'
3/4"X14" GALV. BOLTS W/ WASHERS	6
3/4"X18" GALV. BOLTS W/ WASHERS	6
L-BOLTS (see note #3)	6
8" DIA. 16 GA. PERFORATED C.M.P.	12'

3:1 SIDE SLOPES	2:1 SIDE SLOPES
230'-2"X6" PLANKS	200'-2"X6" PLANKS

TREATED LUMBER DRAINAGE STRUCTURE

U. S. DEPARTMENT OF AGRICULTURE
SOIL CONSERVATION SERVICE

Designed ____ Date ____
Drawn ____
Traced ____
Checked ____
Approved by ____
Title ____
Title ____
Sheet No ____ of ____
Drawing No. ____

MICHIGAN ENGINEERING STANDARD DRAWING

APPROVED BY Loren L. Dahl, S.C.E. DATE 11-17-75

DRAWING NO. SO-N-0210 SHEET 1 OF 1