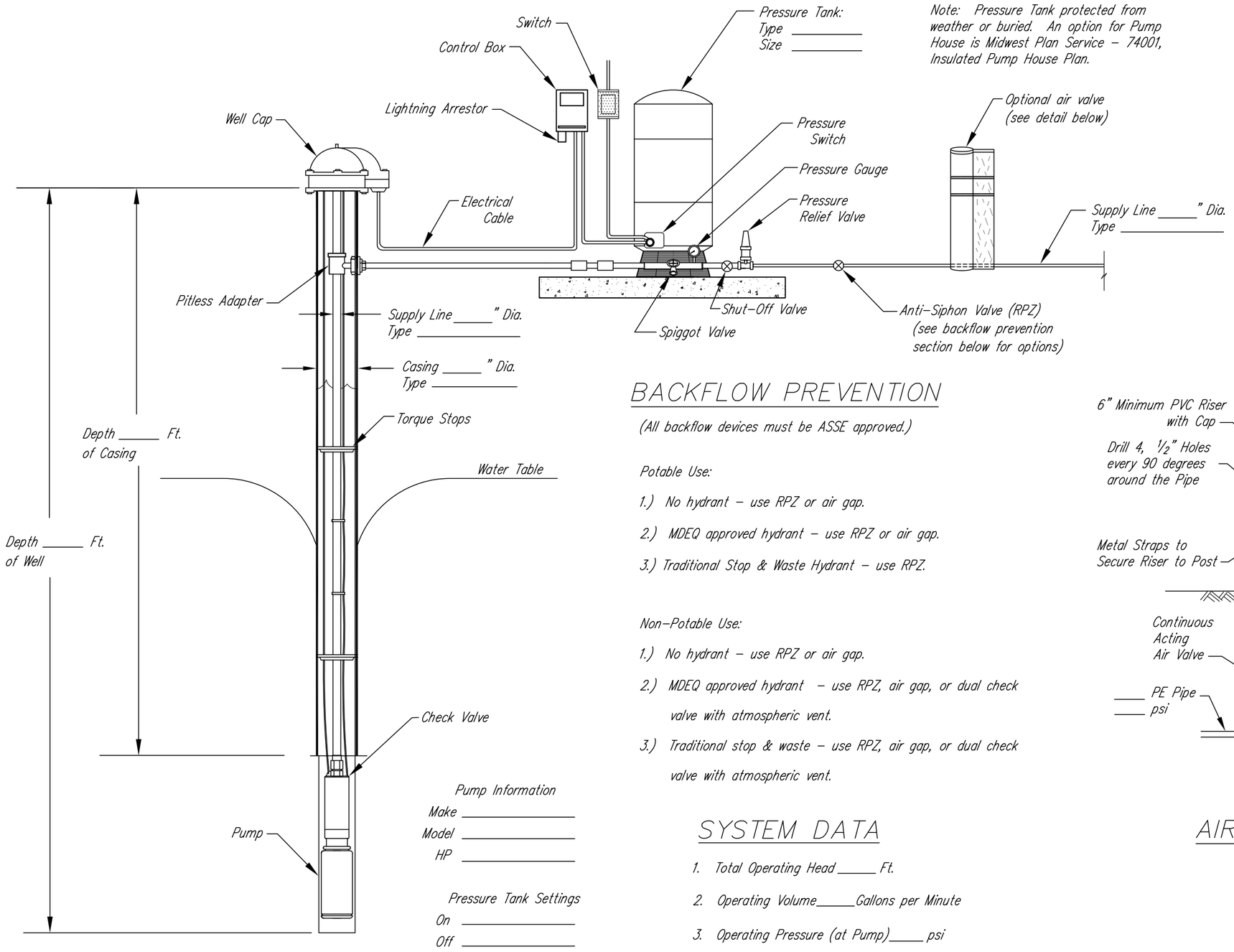

Note: Pressure Tank protected from weather or buried. An option for Pump House is Midwest Plan Service – 74001, Insulated Pump House Plan.

BACKFLOW PREVENTION

(All backflow devices must be ASSE approved.)

Potable Use:

1.) No hydrant – use RPZ or air gap.

2.) MDEQ approved hydrant – use RPZ or air gap.

3.) Traditional Stop & Waste Hydrant – use RPZ.

Non-Potable Use:

1.) No hydrant – use RPZ or air gap.

2.) MDEQ approved hydrant – use RPZ, air gap, or dual check valve with atmospheric vent.

3.) Traditional stop & waste – use RPZ, air gap, or dual check valve with atmospheric vent.

SYSTEM DATA

1. Total Operating Head _____ Ft.
2. Operating Volume_____Gallons per Minute
3. Operating Pressure (at Pump)_____ psi
4. Supply Line Size Length
   ____ _____
   ____ _____
   ____ _____

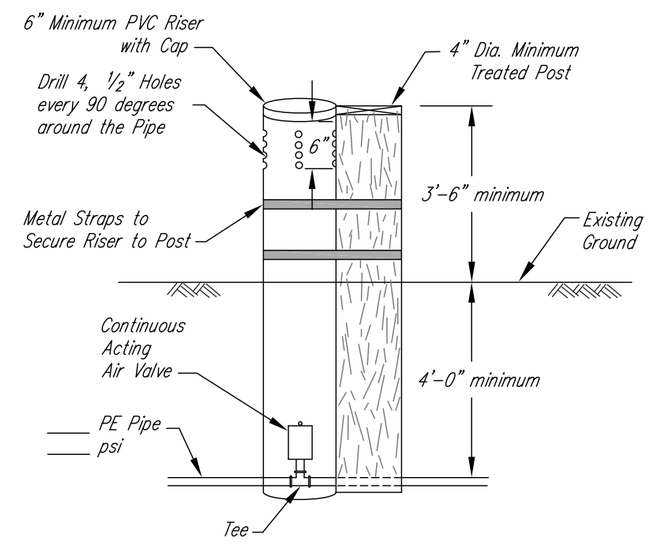

AIR VALVE DETAILS

Dimensions in inches or feet-inches

NOT TO SCALE

MICHIGAN ENGINEERING STANDARD DRAWING	
FILE NAME MI-830-B 11-09.dwg	
STANDARD DWG. NO. MI-830-B	
DATE 11-09	SHEET 1 OF 1

Date
Designed
Drawn
Checked
Approved

Well, Pressure Tank and Air Valve Details

Co., Michigan
Township, T. -R. , Sec.

NRCS
Natural Resources Conservation Service
United States Department of Agriculture

File Name
Drawing Name
Sheet of