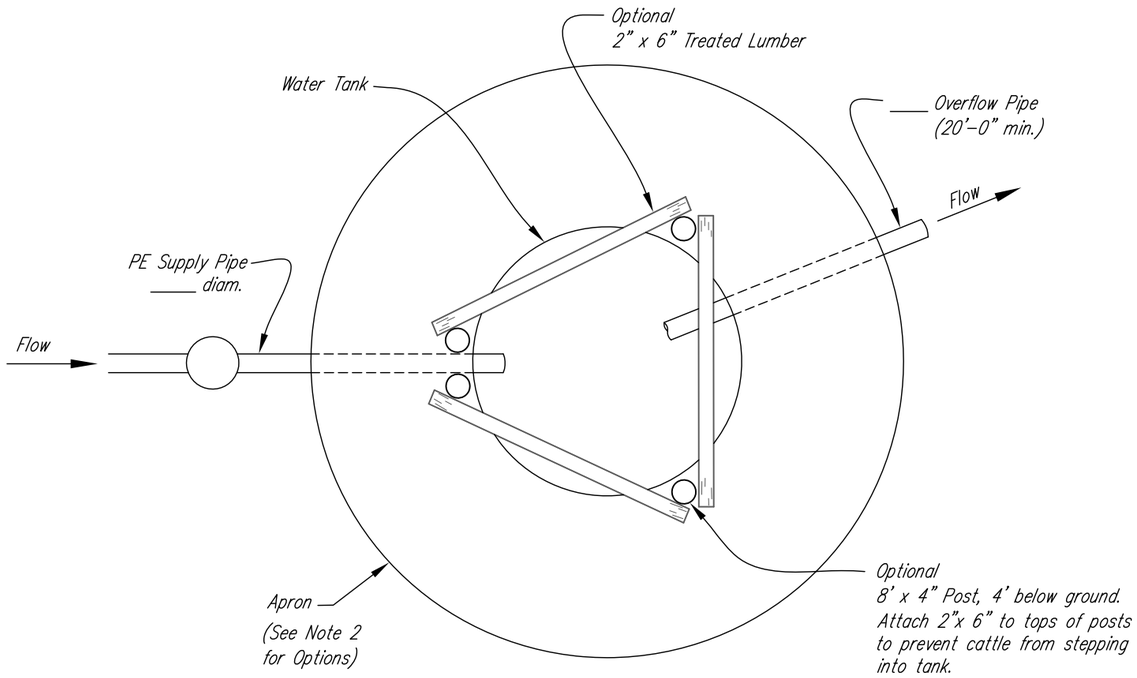

PLAN VIEW

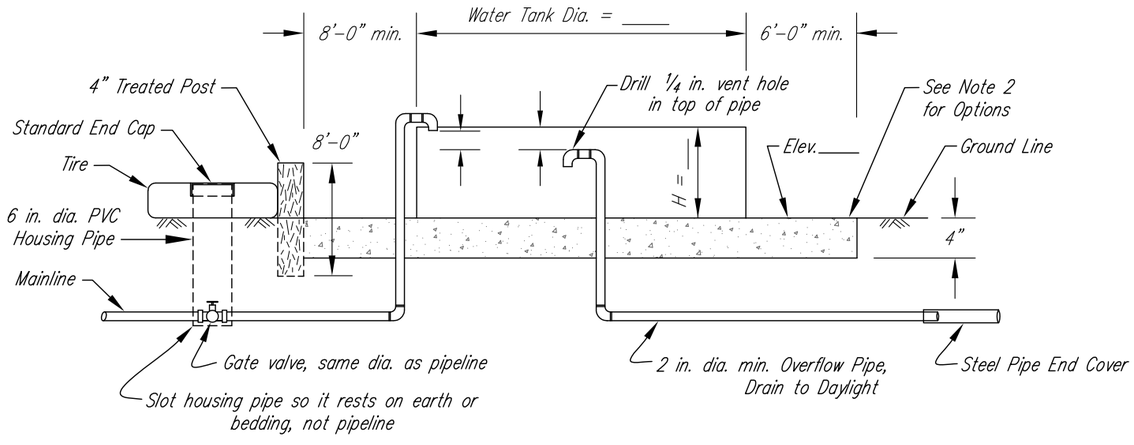

ELEVATION

BILL OF MATERIALS		
Water Tank		
Pipeline		
Air Valve		
Overflow Pipe		
Post, 8' x 4"		
Treated Planks		
Apron		

NOTES:

1. Tank shall be placed on 4 inches of rock, fine gravel, or sand.
2. Apron adjacent to tank shall be graveled, paved or otherwise treated in accordance with Michigan NRCS Standard Heavy Use Area Protection (516).
3. Air gap shall be a minimum of 2x supply pipe diameter.
4. Protection required for overflow pipe to safe outlet.

Dimensions in inches or feet-inches

Not To Scale

MICHIGAN ENGINEERING STANDARD DRAWING	
FILE NAME MI-810-B 11-09.dwg	
STANDARD DWG. NO. MI-810-B	
DATE 11-09	SHEET 1 OF 1

Date
Designed
Drawn
Checked
Approved

Permanent Livestock Watering Tank,
Inlet, and Outlet

Co., Michigan
Township, T. -R. , Sec.

NRCS
Natural Resources Conservation Service
United States Department of Agriculture

File Name

Drawing Name

Sheet of