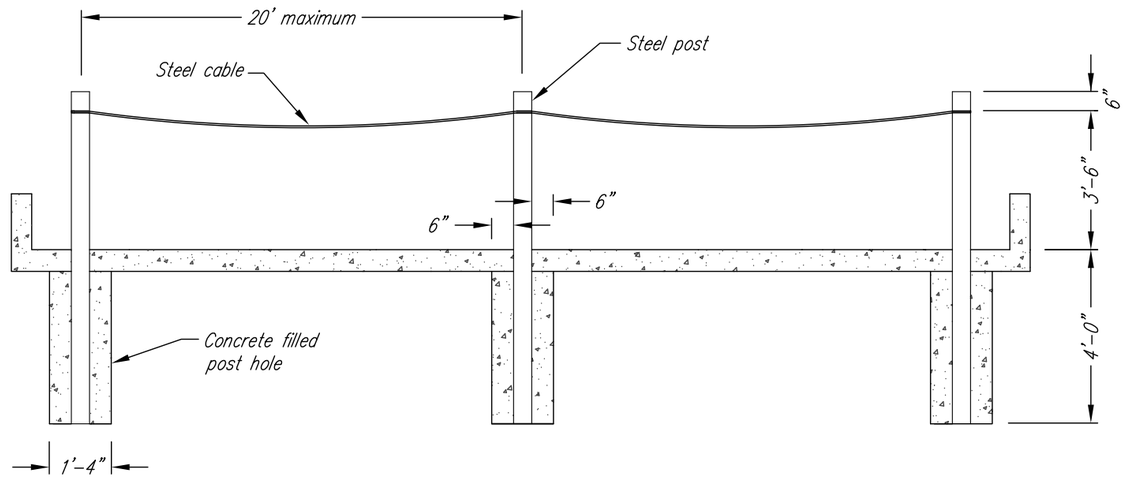

ELEVATION VIEW

BILL OF MATERIALS		
MATERIAL	UNIT	QUANTITY
Steel Posts, 8' x 4" x 1/4"	Each	
Steel Cable, 1/2"	Lin. Ft.	
Post Hole Concrete	Cu. Yds.	

Notes:

1. Do not place steel posts in the retaining wall.
2. Cable shall be attached to posts using method approved by NRCS technician.

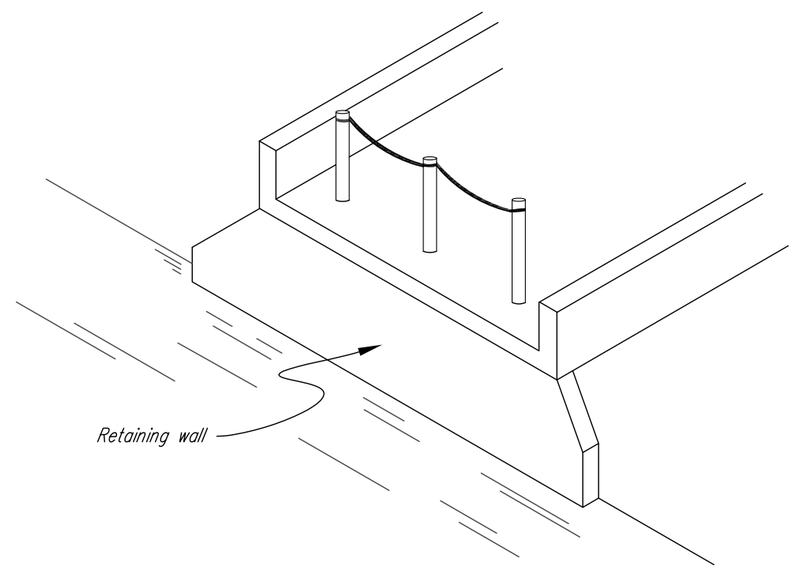

ISOMETRIC VIEW

Dimensions in inches or feet-inches

NOT TO SCALE

MICHIGAN ENGINEERING STANDARD DRAWING	
FILE NAME MI-505-B 1-10.dwg	
STANDARD DWG. NO. MI-505-B	
DATE 1-10	SHEET 1 OF 1

Date
Designed
Drawn
Checked
Approved

RETAINING WALL WITH SAFETY CABLE

Co., Michigan
Township, T. -R. , Sec.

NRCS
Natural Resources Conservation Service
United States Department of Agriculture

File Name

Drawing Name

Sheet of