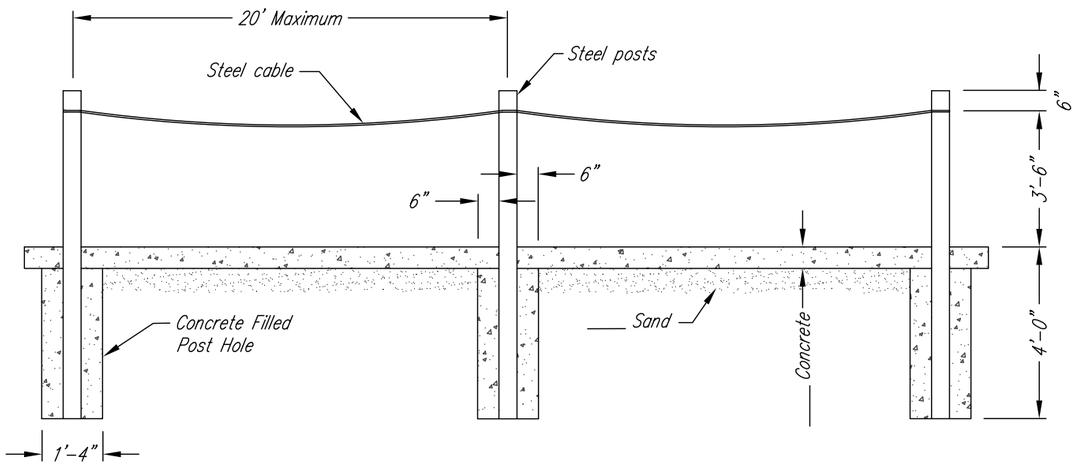

ELEVATION VIEW

BILL OF MATERIALS		
MATERIAL	UNIT	QUANTITY
Steel Posts ; 8' x 4" x ¼"	Each	
Steel Cable ; ½"	Lin. Ft.	
Post Hole Concrete	Cu. Yds.	

NOTE:

1. Cable shall be attached to posts using method approved by NRCS inspector.

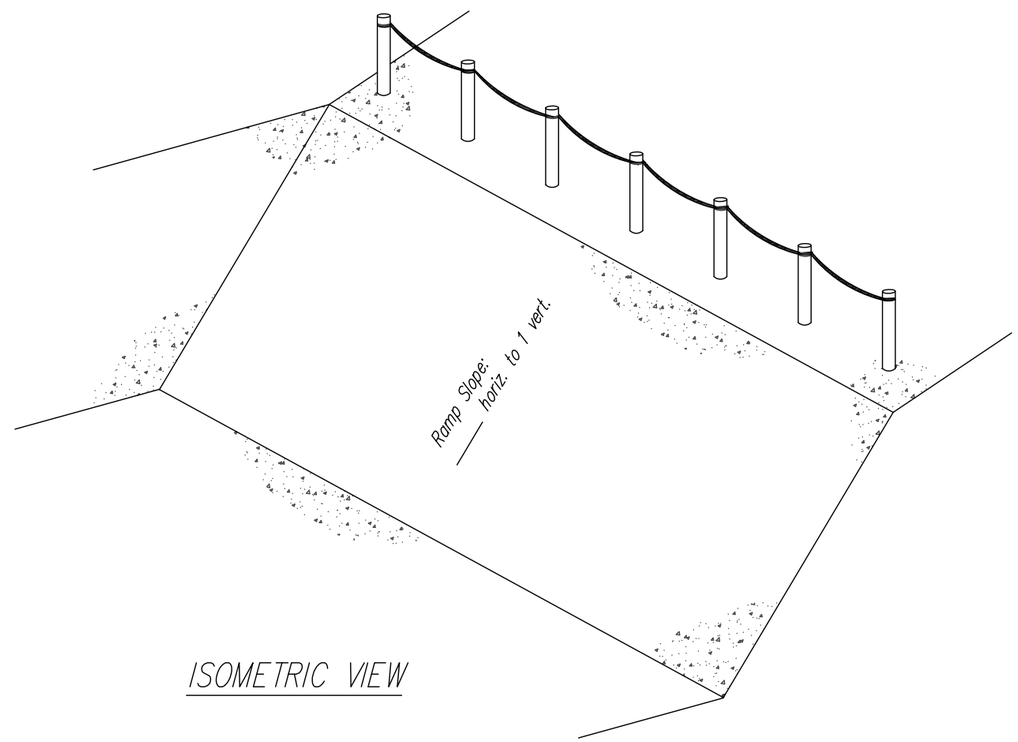

ISOMETRIC VIEW

All dimensions in inches or feet-inches.

Not to Scale

MICHIGAN ENGINEERING STANDARD DRAWING	
FILE NAME MI-506-B 11-10.dwg	
STANDARD DWG. NO. MI-506-B	
DATE 11-10	SHEET 1 OF 1

Date

Designed

Drawn

Checked

Approved

SLOPE WITH SAFETY CABLE

Co., Michigan

Township, T. -R. , Sec.

NRCS
Natural Resources Conservation Service
United States Department of Agriculture

File Name

Drawing Name

Sheet of