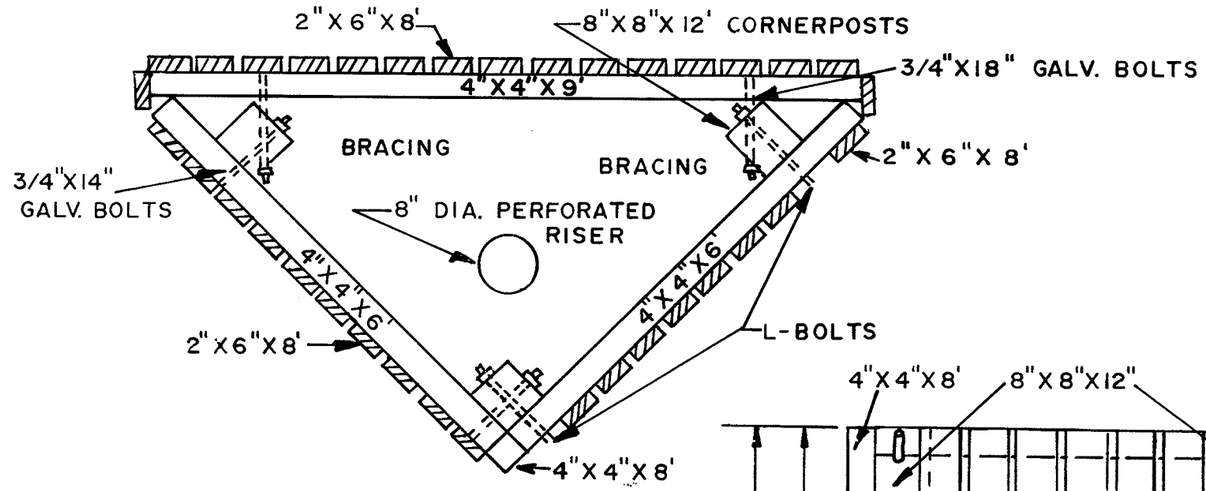

TOP VIEW

MATERIALS	
ITEM	QUANTITY
8"x 8"x 12' POST	3
2'x6"x 8' PLANKS	35
4"x 4" BRACING	71'
3/4"x 14" GALV. BOLTS W/WASHERS	6
3/4"x18" GALV. BOLTS W/WASHERS	6
L-BOLTS (SEE NOTE #3)	6
8"-DIA. 16 GA. PERFORATED C.M.P.	12'

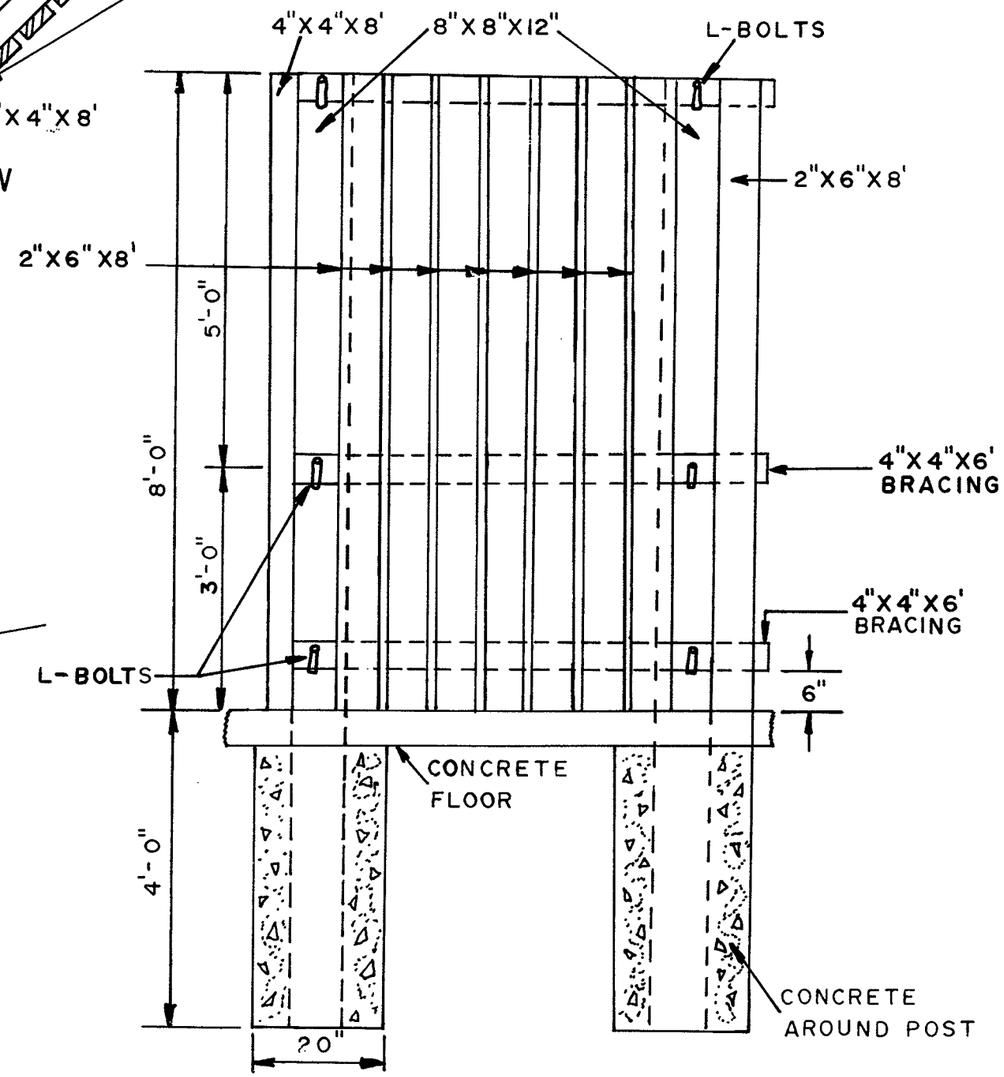

SIDE VIEW

SCALE: 1/2" = 1'

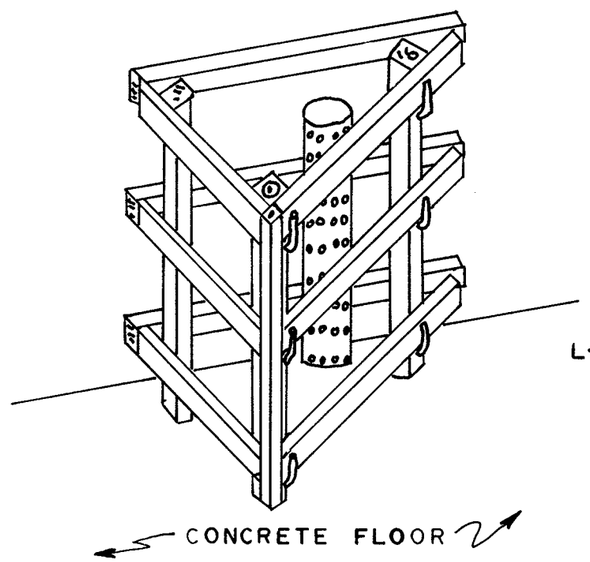

ISOMETRIC VIEW

NOTES:

1. 1" SPACING BETWEEN THE 2"X6"
2. PERFORATED RISER 1" HOLES
3. L BOLTS 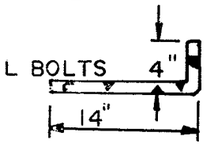

4. ALL LUMBER IS TO BE PRESSURE TREATED.
5. RISER IS 8' ABOVE AND 4' BELOW GROUND W/6" DIA. TILE TO HOLDING POND.

TREATED LUMBER DRAINAGE STRUCTURE

U. S. DEPARTMENT OF AGRICULTURE
SOIL CONSERVATION SERVICE

Designed ..... Date
Drawn .....
Traced .....
Checked .....
Approved by .....
Title .....
Title .....
Sheet No. ..... of
Drawing No.

MICHIGAN ENGINEERING STANDARD DRAWING

APPROVED BY HW Belcher S.C.E. DATE 2-13-80

DRAWING NO SO-N-0212 SHEET 1 OF 1