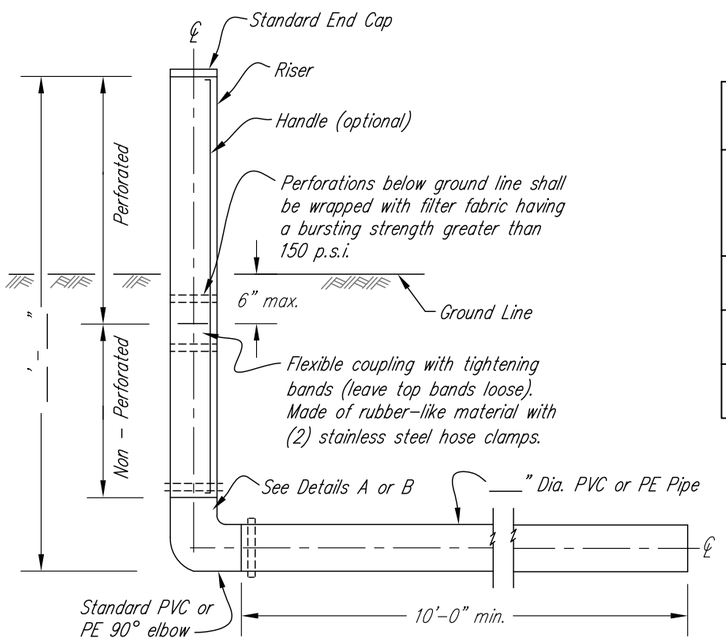

SMOOTH PLASTIC RISER STANDARD DIMENSIONS				
Max. Orifice Dia. (Inches)	Pipe Dia. D (Inches)	Min. Wall Thickness (Inches)	Vertical Rows of Perforations (No.)	Radial Spacing of Vertical Rows (Degrees)
3 1/2	8	0.15	6	60
5 1/2	10	0.20	8	45
6	12	0.25	10	36

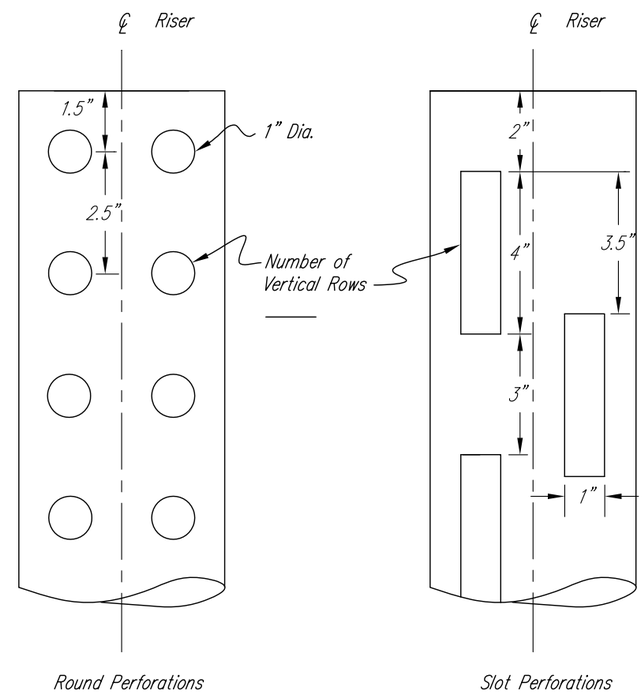

DETAIL OF RISER PERFORATIONS

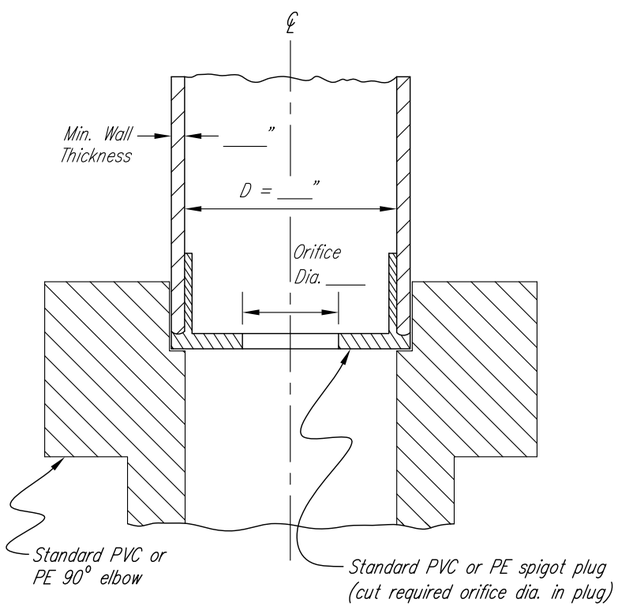

DETAIL A
STATIONARY ORIFICE

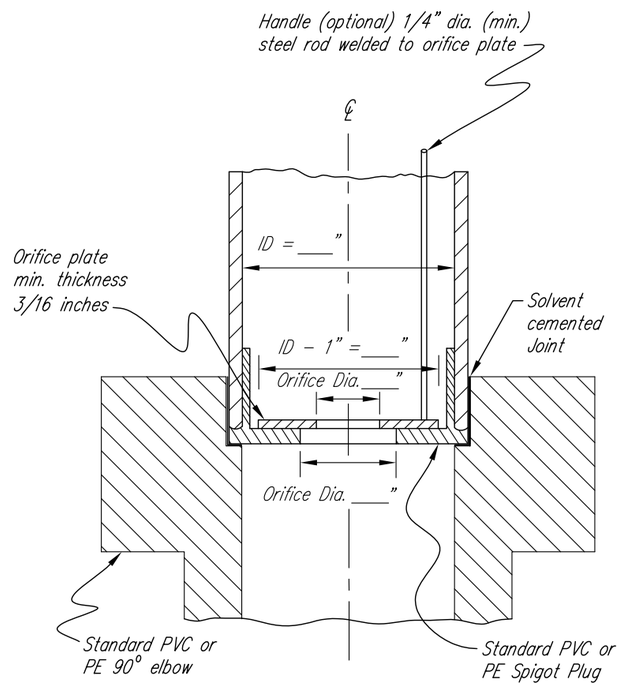

DETAIL B
REMOVABLE ORIFICE

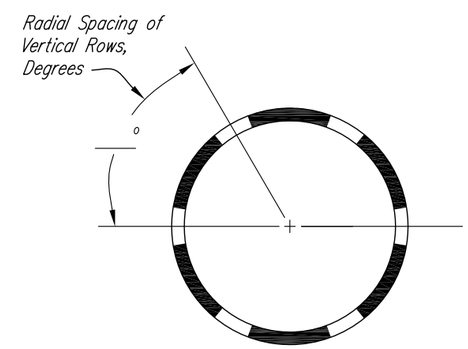

CROSS SECTION OF PERFORATED RISER

Dimensions in inches or feet-inches

Not to Scale

MICHIGAN ENGINEERING STANDARD DRAWING	
FILE NAME MI-160-B 12-10.dwg	
STANDARD DWG. NO. MI-160-B	
DATE 12-10	SHEET 1 OF 1

Date
Designed
Drawn
Checked
Approved

PE or PVC PERFORATED RISER

Co., Michigan
Township, T. -R. , Sec.

NRCS
Natural Resources Conservation Service
United States Department of Agriculture

File Name
Drawing Name
Sheet of