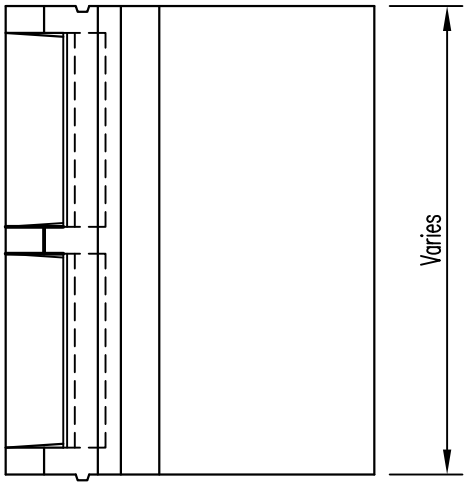

PLAN VIEW

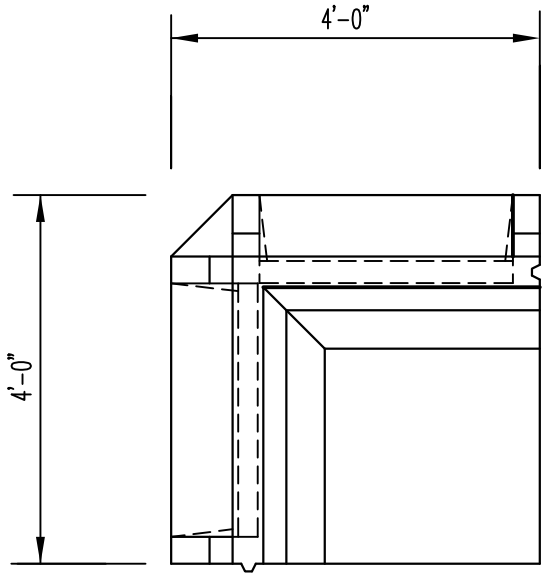

CORNER SECTION

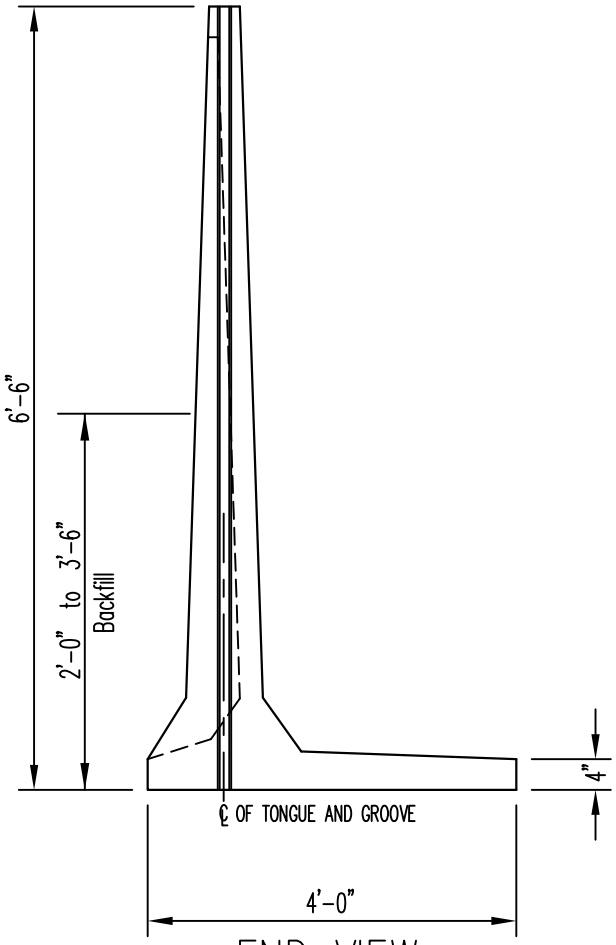

END VIEW

NOT TO SCALE

BASIC REQUIREMENTS FOR PRECAST PANEL INSTALLATION

- The foundation shall be cleared of all vegetation, roots and other debris and shall be excavated to a firm mineral soil.
- A blanket of clean well graded gravel shall be evenly spread to a minimum thickness of 12" to serve as a base for the floor slab.
- The site must be level with 2" of sand where panels will be placed.
- Foundation drainpipes shall be provided around base of panels to ensure that the soil is drained and that the ground water level cannot exceed 2' below the base. Foundation drainpipes shall be encased in drainfill.
- Site must be accessible to boom truck to set the panels unless other arrangements have been previously made.
- The floor slab must be in place prior to backfilling panels.
- Site preparation and floor slab construction are not the responsibility of the concrete product company.
- The backfill shall be free of organic material and stones larger than 6" in diameter. The most pervious material shall be placed next to the foundation drainfill.
- Backfill shall be placed in uniform lifts not to exceed 12" and compacted.
- The steepest allowable slope on backfill is 2:1 with a 3' wide shelf at the top of the bank. Natural embankments shall not be higher than the allowed backfill for a 6' distance.
- It is highly recommended that a safety fence be installed along the top edge of the precast walled structure especially where equipment will operate.

* Standardized designs must be adapted to specific site.

NRCS Natural Resources Conservation Service United States Department of Agriculture	DETAILS FOR 6'-6" STANDARD PRECAST PANEL	Designed ____ Date Drawn STANDARD Checked Approved	File Name Drawing Name ME-ENG-SPP6 Date: 02/2010 Sheet of